Seetru *Safety Relief Valves*

COMPRESSED AIR & GAS | HYDROGEN | CRYOGENIC & LIQUEFIED GAS | LIQUID | HOT WATER | STEAM | REFRIGERATION

SAFETY RELIEF VALVES

SEETRU

www.seetru.com

Edition 5 2.4.2025

Seetru Limited

Bristol-based Manufacturers of Safety and Relief Valves

Seetru Limited was founded in 1949 with the aim of producing the finest liquid level gauges so customers could “see the true” level even under the most severe conditions. This philosophy of making the finest through innovation continued with the introduction of the Seetru range of pressure relief devices, circa 1950 the Seetru Tutchtite-sealing system revolutionized the safety valve market with valves that do not leak even after repeated popping even at high pressures.

Today, Seetru have an extensive range of Pressure Relief Valves and Liquid Level Gauges which carry a wide range of international approvals and are supplied worldwide.

Our Products

Seetru are Bristol-based manufacturers of safety relief valves and other special purpose ancillary valves for a wide range of compressed air, industrial gas, refrigerants, powder, steam, liquid and liquefied gas applications. These valves meet important international standards which include: ISO-4126-1 &-7 and ASME BPVC VIII.1 & XIII design codes as well as type test approvals from TÜV and the National Board. These products comply with the requirements of the European Pressure Equipment Directive (PED) and are available with both the CE mark as well as the UV stamp, and have wide international approvals. Seetru products are fully compliant with the requirements of the UK Pressure Equipment (Safety) Regulations and come with the UKCA mark.

CE UK CA CRN EAC

Seetru also have a wide range of special purpose valves. The range includes Change-Over Valves (designed for switching parallel safety valves without interrupting operation), Minimum Pressure Check Valves (typically suitable for application on compressors), Air-Start Valves (designed to handle a two-stage operation for air starting of engines). We also manufacture a range of Air Receiver & In-line Check Valves.

Seetru liquid level gauges are primarily of two types, sight gauges and magnetic float by-pass gauges. Many of the gauges are direct reading though most have optional electronic remote reading systems and computer interfaces. The range includes the Quickmount, Seemag and CPI gauges for industrial and chemical applications, and the Seeflex and Seemag for marine applications. The Company’s substantial design and development department, which includes TÜV approved testing facilities, enable us to provide extensive bespoke design, advisory and manufacturing services to develop or adapt individual products for new applications.

SeetruLimited
That’s Safety!

www.seetru.com | info@seetru.com | +44 (0) 117 930 6100

Table of contents

TYPE	PRODUCT / DESIGN	MATERIALS	INLET CONNECTIONS	PRESSURES	APPLICATION / INDUSTRY	PAGE
818	ATMOSPHERIC DISCHARGE	BRASS	1/4" to 1" BSP, BSPT or NPT	0.48 to 46.0 bar	COMPRESSED AIR & GAS	7-9
848	Atmospheric Discharge	Stainless Steel	1/4" To 1/2" BSP, BSPT or NPT	0.55 to 21.0 bar	COMPRESSED AIR & GAS	10-12
616	Atmospheric Discharge	Brass	1/4" to 2" BSP, BSPT or NPT	2.0 to 55.0 bar	COMPRESSED AIR & GAS	14-16
73008/74008	Atmospheric Discharge	Brass or Stainless Steel	1/4" to 1/2" BSP, BSPT or NPT	0.27 to 17.5 bar	COMPRESSED AIR & GAS	17-22
10625	Atmospheric Discharge	Brass or Aluminium	1" to 2" BSP, BSPT or NPT	0.50 to 12.0 bar	COMPRESSED AIR & GAS	23-25
31140	Atmospheric Discharge	Brass	2" BSP, BSPT or NPT and 2 1/2" BSPT	2.8 to 9.4 bar	COMPRESSED AIR & GAS	26-28
31180	Atmospheric Discharge	Brass	1/4" BSP, BSPT or NPT	20.6 to 134.5 bar	COMPRESSED AIR & GAS	29-31
31210	Atmospheric Discharge	Brass with Stainless Steel Inlet	3/8" to 3/4" BSP or BSPT	48.2 to 241.4 bar	COMPRESSED AIR & GAS	32-34
55004	Atmospheric Discharge	Brass with Stainless Steel Inlet	1/4" to 1/2" BSP	69 to 448.2 bar	COMPRESSED AIR & GAS	35-37
LGS & LGS HI FLOW	Enclosed Discharge	Bronze with Brass Inlet Ptfe or Elastomer Sealing	DN15 (1/2") to DN65 (2 1/2")	0.2 to 24.0 bar	COMPRESSED AIR & GAS, HOT WATER, LIQUIDS (WRAS APPROVED), STEAM	40-43
P3W (P&T)	Enclosed Discharge	Bronze with Brass Inlet	DN15 (1/2") to DN65 (2 1/2")	0.4 to 12.5 bar	LIQUIDS (WRAS APPROVED), HOT WATER	44-45
636/656/646	Enclosed Discharge	Bronze or Stainless Steel	3/8" to 2" BSP, BSPT or NPT	0.32 to 55.2 bar	COMPRESSED AIR & GAS, HYDROGEN	46-51
63608	Enclosed Discharge	Brass with Pps Plastic Outlet Body	1/4 to 1/2" BSP, BSPT or NPT	0.3 to 13.2 bar	COMPRESSED AIR & GAS, STEAM	52-54
86810	Enclosed Discharge	Brass With Pps Plastic Outlet Body	1/2" to 3/4" BSP, BSPT or NPT	7.0 to 16.0 bar (Not Full Range)	COMPRESSED AIR & GAS	55-57
346/356	Enclosed Discharge	Bronze or Stainless Steel	3/8" to 3/4" BSP, BSPT or NPT	0.83 to 30.76 bar	COMPRESSED AIR & GAS, REFRIGERATION, CRYOGENICS & LIQUEFIED GASES	59-61
936/946	Enclosed Discharge Threaded Connections	Bronze Stainless Steel Metal to Metal Sealing	1/2" to 2" BSP, BSPT or NPT	0.3 to 28.0 bar	COMPRESSED AIR & GAS, STEAM, CRYOGENICS & LIQUEFIED GASES, HYDROGEN	62-67
33020/ 34020/ 34320	Enclosed Discharge	Brass or Stainless Steel	3/8" to 1/2" BSP, BSPT or NPT	55.0 to 103.4 bar	COMPRESSED AIR & GAS, HYDROGEN	68-70
33110/ 34110/ 34410	Enclosed Discharge	Brass or Stainless Steel	3/8" to 1/2" BSP, BSPT or NPT	27 to 241.3 bar	COMPRESSED AIR & GAS, HYDROGEN	71-73
329	Enclosed Discharge	Bronze or Stainless Steel	3/8" to 3/4" BSP, BSPT or NPT	53.0 to 370.0 bar	COMPRESSED AIR & GAS, REFRIGERATION, CRYOGENICS & LIQUEFIED GASES, HYDROGEN	74-76
B4605 / B6605 / 359	Enclosed Discharge	Stainless Steel	3/8" to 1/2" BSP, BSPT or NPT	35.0 to 500.0 bar	COMPRESSED AIR & GAS, HYDROGEN	77-79
94605 / 946H5 / 95605 / 956H5	Enclosed Discharge	Stainless Steel	◦ ½" NPT, BSP & BSPT ◦ 9/16" CONE & THREAD ◦ 3/4" CONE & THREAD	Set Pressures from 35.0 to 1100.0 bar	HYDROGEN, AIR & GAS, CRYOGENICS, REFRIGERATION, STEAM	81-83
6G6 CLEAN SERVICE	Enclosed Discharge Tri-Clamp Connections	Stainless Steel FDA Compliant Elastomer Sealing	1/2" to 1" TRI-CLAMP	0.32 to 55.2 bar	COMPRESSED AIR & GAS, STEAM, HYGIENIC	84-86
946 FLANGED	Enclosed Discharge Flanged Connections	Stainless Steel	DN20 (3/4") or DN25 (1") DIN or ANSI FLANGES	0.3 to 28.0 bar	COMPRESSED AIR & GAS, STEAM, CRYOGENICS, REFRIGERATION	87-89
646 FLANGED	Enclosed Discharge Flanged Connections	Stainless Steel	DN20 (3/4") or DN25 (1") DIN or ANSI FLANGES	0.32 to 49.0 bar	COMPRESSED AIR & GAS	90-91
75008	Atmospheric Discharge	Brass	1/4" to 1/2" BSP, BSPT or NPT INLET	0.27 to 5.0 bar	STEAM	94-96
319-INLINE	Enclosed Discharge	Brass	3/8" to 3/4" NPT or UNF	13.5 to 50.0 bar	REFRIGERATION	98-100
636/646 REFRIG	Atmospheric Discharge	Bronze or Stainless Steel	3/8" to 1 1/2" BSP, BSPT or NPT (UNF)	7.0 to 55.2 bar	COMPRESSED AIR & GAS, REFRIGERATION	101-106
670/690/680	Enclosed Discharge	Bronze or Stainless Steel	3/8" to 2" BSP, BSPT or NPT	0.7 to 30.0 bar	LIQUIDS	108-113
970/980	Enclosed Discharge	Bronze or Stainless Steel	1/2" to 2" BSP, BSPT or NPT	0.3 to 36.0 bar	LIQUIDS	114-119
980-FLANGED	Enclosed Discharge Flanged Connections	Stainless Steel Metal to Metal Sealing	DN20 (3/4") to DN25 (1") DIN or ANSI FLANGES	0.3 to 33.0 bar	LIQUIDS	120-122
6L0 CLEAN SERVICE	Enclosed Discharge Tri-Clamp Connections	Stainless Steel Fda Compliant Elastomer Sealing	1/2" to 1" TRI-CLAMP	0.7 to 30.0 bar	LIQUIDS, HYGIENIC	123-125
COV10/13/30	Change Over Valve Threaded Connections	Stainless Steel Elastomer or Ptfe Sealing	1/2" to 2" BSP, BSPT or NPT	Pressures up to 100 bar	REFRIGERATION, COMPRESSED AIR & GAS, CRYOGENICS & LIQUEFIED GASES	126-128

PhD Chartered Engineers

Innovation Fuelled by Expertise

SEETRU

Where Innovation Meets Expertise

At Seetru, safety isn't just a priority, it's a passion fueled by a team of highly qualified engineers. We combine cutting-edge innovation with unparalleled expertise to deliver the industry's most reliable and advanced safety relief valves.

Our team boasts a unique blend of academic excellence and real-world experience. Many of our engineers hold PhDs and are Chartered Engineers, signifying their commitment to ongoing professional development and adherence to the highest engineering standards.

www.seetru.com/about-seetru

Ensuring Safety
Reliable protection for your pressurised systems
Why Choose Seetru Safety Valves?
Seetru prioritises rigorous testing and analysis, ensuring exceptional valve performance across diverse applications. Our keen understanding of various industries allows them to tailor valves to specific needs. By combining cutting-edge design, unparalleled expertise, and application-specific solutions, Seetru have established ourselves as a leader in the safety valve industry.
A company you can trust to safeguard your critical systems
www.seetru.com/approvals

Seetru Safety Relief Valves

Setting the Standard
Seetru safety valves set the standard for reliability and safety across a wide range of industrial applications

Engineered for Every Need
Safety valves available with a range of bore sizes, material options, and connection types.

Performance Approved
The Seetru range of safety valves are approved for a wide range of temperatures & pressures

Powerful Protection ...In the Palm of Your Hand

Easier Installation
Seetru safety valves fit seamlessly into tight spaces, simplifying system integration

Enhanced Flexibility
Allows for greater layout freedom during system design

www.seetru.com

Atmospheric Discharge Safety Relief Valves

for compressed air or gases

Seetru Limited

Type 818 / 811

Safety valves made from Brass <
Atmospheric discharge with threaded connections <

Example Applications

- Compressors
- Pressure vessels
- Pneumatic systems
- Transport and railway systems

Specifications

- Inlet connections: ¼" to 1" (depending on bore size)
- Temperature: -60°C to +200°C (depending on seal material)
- Pressure range: 0.48 to 50.9 bar (depending on bore size)

Approvals

- Designed in accordance with BS EN ISO-4126-1 &-7
- PED 2014/68/EU (CE)
- PE(S)R UK SI 2016 No. 1105 (UKCA)
- ASME BPVC VIII.1 & XIII (UV)
- CRN

Materials of Construction

Component	Material	Grade
Body	Brass	CW614N
Internal Parts	Brass	CW614N
Spring	Stainless Steel	1.4310 (302)

Seal Materials

Seal Material	Temperature Range
FKM (Viton®)	-15°C to +200°C
Hydrogenated Nitrile (HNBR)	-60°C to +150°C

Easing Gear / Lifting Gear Options

- Standard option – Rota-lift cap, twist type
- Spindle lift – for 6mm and 8mm bore valves
- Ring-pull – option available upon request

Other options:
[1]Downward deflecting shroud available for valves with 8 to 15mm bore.

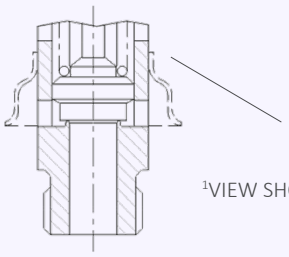

[1]VIEW SHOWING OPTIONAL SHROUD AVAILABLE

Technical information by bore size

Bore size	6 mm		8 mm			10 mm		13 mm		15 mm	
Inlet Size	1/4”	3/8”	1/4"	3/8"	1/2"	1/2"	3/4"	1/2"	3/4"	3/4”	1”
Flow Area	28.3mm²		50.27 mm²			78.54 mm²		132.7 mm²		181.5 mm²	
H - Height (Rota-lift cap)	53.5 mm		52mm-67mm depending on model			80 mm (up to 21 bar) 100 mm (21-46 bar)		95mm		119 mm	
TÜV allotted outflow coefficient 1	0.74		0.74			0.74 above 0.8 bar (0.65 below 0.8 bar)		0.74		0.74	
NB Rated discharge coefficient (ASME)	0.748		0.748			-		-		-	
NB Certified rated slope (ASME)	-		-			1.66 scfm/psia		2.94 scfm/psia		4.04 scfm/psia	
Weight (approximate) Kg	0.07		0.15			0.35		0.40		0.65	
Set Pressure range - PED (CE) bar	2.8- 36.0		0.55- 43.7			0.48 – 50.9		2.8- 40.0		2.5- 40.0	
Set Pressure range - ASME (UV) psi	40.6- 522.0		43.5 – 633.6			34.8 – 738		40.6 – 580.0		36.25 – 580.0	
Relieving pressure/fully open pressure	Set pressure +10%										
Reseating pressure	Set pressure -10%										

1 TÜV alloted outflow coefficients for pressures above 3.0 bar, for lower pressures please see the flow rate tables or contact Seetru.

Valves with Rota-lift Easing Gear

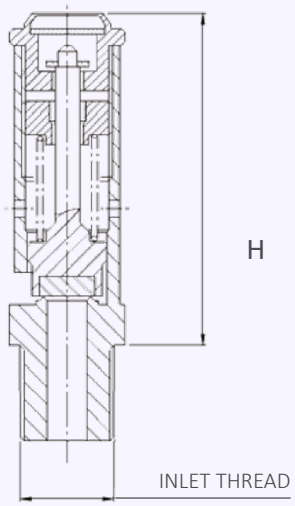

Standard Thread Connection Types

- BSP Parallel male thread
- BSP Taper male thread
- NPT male thread

Valve Selection Guide

Approval Required	Valve Type	Select Bore	Inlet Size	Thread Type	Easing Gear	Seal Material
PED (CE)	“818”	“06” = 6mm	Select inlet size from above table	Select thread type	Select easing gear (rota-lift is the standard option)	Viton®
		“88” = 8mm				
		“10” = 10mm				
PED (CE), ASME (UV) & CRN	“811”	“13” = 13mm				HNBR
		“15” = 15mm				

EAC marking available upon request

***Please send your selected details to Seetru and we can provide the full ordering code, price and lead-time.**

Example of Valve Selection Process

Example Selection	CE	818	06	1/4"	BSP Taper	Rota-lift	Viton	10.5 bar
	Approval	Valve Type	Bore = 6mm	Inlet Size	Thread Type	Easing Gear	Seal	Set Pressure

Capacity Table - In accordance with TÜV, AIR at 0°C and 1013mbar. Normal m³/hour

Type 818: Flow rates at 10% above the set pressure

Set Pressure		Bore Size (D0)				
		6mm	8mm	10mm	13mm	15mm
bar	psi	Nm³/Hour	Nm³/Hour	Nm³/Hour	Nm³/Hour	Nm³/Hour
0.48	6.96			53.9		
0.55	7.975		41.5	56.9		
1	14.5		53.5	83.6		
2	29		81.4	127.2		
2.5	36.25		95.3	148.9		344.2
2.8	40.6	58.3	103.7	162.0	273.8	374.4
3	43.5	61.5	109.2	170.7	288.5	394.5
4	58	77.2	137.1	214.3	394.5	495.1
5	72.5	92.8	165.0	257.8	435.7	595.7
6	87	108.5	192.8	301.3	509.3	696.3
7	101.5	124.2	220.7	344.9	582.9	796.9
8	116	139.8	248.6	388.4	656.5	897.5
9	130.5	155.5	276.5	432.0	730.1	998.1
10	145	171.2	304.3	475.6	803.7	1,098.7
11	159.5	186.8	332.2	519.1	877.3	1,199.4
12	174	202.5	360.1	562.6	950.9	1,300.0
13	188.5	218.2	387.9	606.2	1,024.5	1,400.6
14	203	233.9	415.8	649.7	1,098.1	1,501.2
15	217.5	249.5	443.7	693.3	1,171.7	1,601.8
20	290	327.9	583.1	911.1	1,539.6	2,104.9
25	362.5	406.3	722.4	1,128.8	1,907.6	2,607.9
30	435	484.7	861.7	1,346.5	2,275.6	3,110.9
35	507.5	563.1	1001.1	1,564.2	2,643.6	3,614.0
36	522	578.8	1028.9	1,607.8	2,717.2	3,714.6
40	580		1140.4	1,781.9	3,011.5	4,117.1
43.7	633.65		1243.5	1,943.1		
45	652.5			1,999.7		
50	725			2,217.4		
50.9	738.05			2256.64		

Capacity Table - In accordance with ASME BPVC.XIII, AIR at 60°F and 14.7 psia/scfm. SCFM

Type 811 (818): Flow rates at 10% above the set pressure

Set Pressure		Bore Size (D0)				
		6mm	8mm	10mm	13mm	15mm
Psi	Bar	SCFM	SCFM	SCFM	SCFM	SCFM
35	2.41			88.3		
36.25	2.50			90.6		220.5
40	2.76			97.4		237.1
41	2.80	35.9		99.2	175.8	241.5
43.5	3.00	37.6	66.8	103.8	183.9	252.7
50	3.45	41.9	74.4	115.7	204.9	281.5
60	4.14	48.5	86.1	133.9	237.2	325.9
70	4.83	55.1	97.9	152.2	269.5	370.4
80	5.52	61.6	109.6	170.5	301.9	414.8
90	6.21	68.3	121.4	188.7	334.2	459.3
100	6.90	74.9	133.1	206.9	366.5	503.7
150	10.34	107.9	191.8	298.2	528.2	725.8
200	13.79	140.9	250.5	389.5	689.8	947.9
250	17.24	173.9	309.2	480.8	851.5	1170.1
300	20.69	206.9	367.9	572.0	1013.2	1392.2
350	24.14	240.0	427.1	663.3	1174.8	1614.4
400	27.59	273.0	485.9	754.6	1336.5	1836.5
450	31.03	306.0	544.6	845.9	1498.1	2058.7
500	34.48	339.1	603.4	937.2	1659.8	2280.8
522	36.00	353.6	629.2	977.3	1730.9	2378.5
550	37.93		662.2	1028.5	1821.5	2503.0
580	40.00		697.4	1083.2	1918.5	2636.2
600	41.38		720.9	1119.7		
633.65	43.70		760.5	1181.2		
650	44.83			1210.9		
667	46.00			1242.0		
725	50			1347.91		
738.05	50.9			1371.73		

Atmospheric Discharge Safety Relief Valves

for compressed air or gases

Seetru Limited

Type 848 / 841

Safety valves made from Stainless Steel <
Atmospheric discharge with threaded connections <

Example Applications

- Compressors
- Pressure vessels
- Pneumatic systems
- Transport and railway systems

Specifications

- Inlet connections: ¼" to 1/2"
- Temperature:-60°C to +200°C (depending on seal material)
- Pressure range: 0.55 to 21.0 bar

Approvals

- Designed in accordance with BS EN ISO-4126-1 &-7
- PED 2014/68/EU (CE)
- PE(S)R UK SI 2016 No. 1105 (UKCA)
- ASME BPVC VIII.1 & XIII (UV)
- CRN

Materials of Construction

Component	Material	Grade
Body	Stainless Steel	1.4401 (316)
Internal Parts	Stainless Steel	1.4401 (316)
Spring	Stainless Steel	1.4310 (302)

Seal Materials

Seal Material	Temperature Range
Viton® (FKM)	-15°C to +200°C
Hydrogenated Nitrile (HNBR)	-60°C to +150°C

Easing Gear / Lifting Gear Options

- **Standard option** – Rota-lift cap, twist type
- **Other option** - Spindle lift

Technical information by bore size

Bore size	8mm		
Inlet Size	1/4"	3/8"	1/2"
Flow Area	50.27 mm²		
H - Height (Rota-lift cap)	52mm (1/4" & 3/8") 56mm (1/2")		
TÜV alloted outflow coefficient [1]	0.74		
NB Rated discharge coefficient (ASME)	0.748		
Weight (approximate) Kg	0.3		
Set Pressure range - PED (CE) bar	0.55- 21.0		
Set Pressure range - ASME (UV) psi	43.5- 304.5		
Relieving pressure/fully open pressure	Set Pressure +10% (0.1 bar below 1.0 bar)		
Reseating pressure	Set pressure-10% (0.3 bar below 3.0 bar)		

[1] TÜV alloted outflow coefficients for pressures above 3.0 bar, for lower pressures please see the flow rate tables or contact Seetru.

Valves with Rota-lift Easing Gear

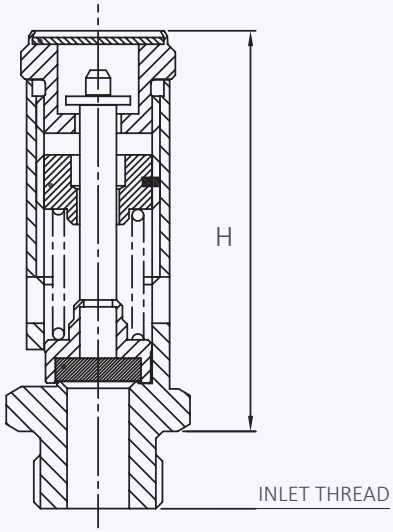

Standard Thread Connection Types

- BSP Parallel male thread
- BSP Taper male thread
- NPT male thread

Valve Selection Guide

Approval Required	Valve type	Select Bore	Inlet Size	Thread Type	Easing Gear	Seal Material
PED (CE)	848	8mm	Select inlet size from above table	Select thread type	Select easing gear (rota-lift is the standard option)	Viton®
PED (CE), ASME (UV) & CRN	841					HNBR

EAC marking available upon request

***Please send your selected details to Seetru and we can provide the full ordering code, price and lead-time.**

Example of Valve Selection Process

Example Selection	CE	848	8	1/4"	BSP Taper	Rota-lift	Viton	13.5 bar
	Approval	Valve Type	Bore = 8mm	Inlet Size	Thread Type	Easing Gear	Seal	Set Pressure

Capacity Table - In accordance with TÜV, AIR at 0°C and 1013mbar. Normal m³/hour

Type 848: Flow rates at 10% above the set pressure.

Set Pressure		Bore Size (D0)				
		8mm				
Bar g	Psi g	Nm³/Hour				
0.55	7.975	41.5				
1	14.5	53.5				
2	29	81.4				
3	43.5	109.3				
4	58	137.2				
5	72.5	165.0				
6	87	192.9				
7	101.5	220.8				
8	116	248.6				
9	130.5	276.5				
10	145	304.3				
11	159.5	332.2				
12	174	360.1				
13	188.5	387.9				
14	203	415.8				
15	217.5	443.7				
20	290	583.1				
21	304.5	610.9				

Capacity Table - In accordance with ASME BPVC.XIII, AIR at 60°F and 14.7 psia/scfm. SCFM

Type 841 (848): Flow rates at 10% above the set pressure.

Set Pressure		Bore Size (D0)				
		8mm				
psi	bar	SCFM				
43.5	3.00	66.8				
50	3.45	74.4				
60	4.14	86.1				
70	4.83	97.9				
80	5.52	109.6				
90	6.21	121.4				
100	6.90	133.1				
150	10.34	191.8				
200	13.79	250.5				
250	17.24	309.2				
300	20.69	367.9				
304.5	21.00	373.2				

Experts In the Industry

Safety Valves for Compressed Air & Gas

The compressed air and gas industry is the largest industry that Seetru serves, our products have been protecting compressed air and gas systems from overpressure for over 75 years. Compressed air and gas systems are used in a wide variety of industries, including manufacturing, construction, oil and gas, and transportation. Seetru safety relief valves are essential for protecting these systems from overpressure, which can cause catastrophic failure. Overpressure can be caused by a variety of factors, including equipment failure, human error, and natural disasters.

SEETRU

- **Air/gas compressors and pumps**
- **Technical gases and CO2 plants**
- **Chemical equipment and piping**
- **Pressure vessels/receivers and piping systems containing air or gases**
- **Thermal relief**
- **Rail Industry**
- **Medical gases**

www.seetru.com/compressed-air-and-gas

www.seetru.com | info@seetru.com | +44 (0) 117 930 6100

Atmospheric Discharge Safety Relief Valves

for compressed air or gases

Seetru Limited

Type 616 / 611

Safety valves made from Brass <
Atmospheric discharge with threaded connections <

Example Applications

- Compressors
- Pressure vessels
- Pneumatic systems
- Transport and railway systems

Specifications

- Inlet connections: ¼" to 2" (depending on bore size)
- Temperature:-40°C to +200°C (depending on seal material)
- Pressure range: 2.0 to 55.0 bar (depending on bore size)

Approvals

- Designed in accordance with BS EN ISO-4126-1 &-7
- PED 2014/68/EU (CE)
- PE(S)R UK SI 2016 No. 1105 (UKCA)
- ASME BPVC VIII.1 & XIII (UV)
- CRN (for 18mm & 20mm bore valves only)

Materials of Construction

Component	Material	Grade
Inlet	Brass	CW614N
	Stainless Steel	1.4401 (316)
Body	Brass	CW614N
Internal parts	Brass	CW614N
Spring	Stainless Steel	1.4310 (302)

Seal Materials

Seal Material	Temperature Range
Viton® (FKM)	-15°C to +200°C
Nitrile (NBR)	-40°C to +120°C

Easing Gear / Lifting Gear Options

- Standard option – Rota-lift cap, twist type
- None – No easing gear
- Lever lift – available on request (10-20mm bores)

Other options:
[1]Downward deflecting shroud available for valves with 10 to 20mm bores

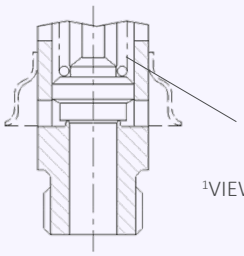

[1]VIEW SHOWING OPTIONAL SHROUD AVAILABLE

Technical information by bore size

Bore Size	8mm			10mm (9.6mm)				13mm			18mm			20mm			
Inlet Size	1/4"	3/8"	1/2"	3/8"	1/2"	3/4"	1"	3/4"	1"	1 1/4"	1"	1 1/4"	1 1/2"	1"	1 1/4"	1 1/2"	2"
Flow Area	50.27mm²			72.4mm²				132.7mm²			254.5mm²			314.0mm²			
H - Height (Rota-lift cap version)	81mm			109mm (up to 19 bar) 119.5mm (19-44 bar)				124.5 bar			148mm (up to 18 bar) 156mm (18-36 bar)			166mm			
TÜV allotted outflow coefficient [1]	0.77			0.77				0.77			0.77			0.77			
NB Certified rated slope (ASME)	X			X				X			6.04 scfm/psia			7.32 scfm/psia			
Weight (approximate) Kg	0.4			0.8				1.0			1.8			2.1			
Set Pressure range - PED (CE) bar	14.5- 55.0			2.3- 44.0				2.8- 41.4			2.1- 36.0			2.0- 18.0			
Set Pressure range - ASME (UV) psi	X			X				X			30.45- 522.0			29.0- 261.0			
Relieving pressure/fully open pressure	Set pressure +10%																
Reseating pressure	Set pressure -10%																

Valves with Rota-lift Easing Gear

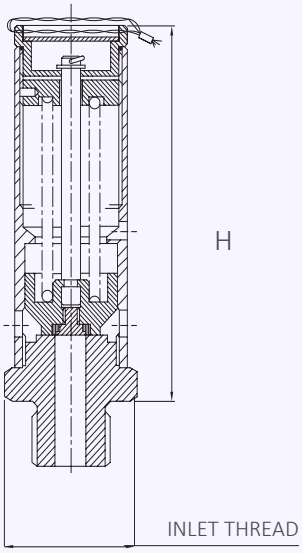

Standard Thread Connection Types

- BSP Parallel male thread
- BSP Taper male thread
- NPT male thread

Valve Selection Guide

Approval Required	Valve Type	Select Bore	Inlet Size	Thread Type	Easing Gear	Seal Material
PED (CE)	616 (Brass inlet)	82 = 8mm	Select inlet size from above table	Select thread type	Select easing gear (rota-lift is the standard option)	Viton® (FKM)
		10 = 9.6mm				
	626 (St. Steel inlet)	13 = 13mm				
PED (CE), ASME (UV) & CRN	611 (Brass inlet)	18 = 18mm				Nitrile (NBR)
	621 (St. Steel inlet)	20 = 20mm				

EAC marking available upon request

***Please send your selected details to Seetru and we can provide the full ordering code, price and lead-time.**

Example of Valve Selection Process

Example Selection	CE	616	13	1"	BSP Taper	Rota-lift	Viton	10.5 bar
	Approval	Valve Type	Bore = 13mm	Inlet Size	Thread Type	Easing Gear	Seal	Set Pressure

Capacity Table - In accordance with TÜV, AIR at 0°C and 1013mbar. Normal m³/hour

Type 616: Flow rates at 10% above the set pressure.

Set Pressure		Bore Size (D0)				
		8mm	9.6mm	13mm	18mm	20mm
bar	psi	Nm³/Hour	Nm³/Hour	Nm³/Hour	Nm³/Hour	Nm³/Hour
2	29					529.5
2.1	30.45				443.5	547.6
2.3	33.35		134.5		472.9	583.8
2.8	40.6		155.4	284.9	546.3	674.5
3	43.5		163.7	300.2	575.6	710.7
4	58		205.5	376.8	722.4	891.9
5	72.5		247.2	453.4	869.3	1073.2
10	145		456.1	836.3	1603.3	1979.4
14.5	210.25	447.2	644.0	1180.9	2264.0	2795.0
15	217.5	461.7	664.8	1219.2	2337.4	2885.7
20	290	606.7	873.6	1602.1	3071.4	
25	362.5	751.7	1082.4	1984.9	3805.5	
30	435	896.7	1291.2	2367.8	4539.5	
35	507.5	1041.7	1500.0	2750.7	5273.6	
36	522	1070.7	1541.8	2827.3	5420.4	
40	580	1186.7	1708.8	3133.6		
41.4	600.3	1227.3	1767.3	3240.8		
44	638	1302.7	1875.9			
45	652.5	1331.7				
50	725	1476.7				
55	797.5	1621.7				

Capacity Table In accordance with ASME BPVC.XIII, AIR at 60°F and 14.7 psia/scfm. SCFM

Type 616 (611): Flow rates at 10% above the set pressure.

Set Pressure		Bore Size (D0)				
		8mm	9.6mm	13mm	18mm	20mm
psi	bar	SCFM	SCFM	SCFM	SCFM	SCFM
29	2.00					341
30.45	2.50				291	525
35	2.41				321	389
40	2.80				355	429
50	3.45				421	510
60	4.14				487	590
70	4.83				554	671
80	5.52				620	751
90	6.21	Not ASME Approved	Not ASME Approved	Not ASME Approved	687	832
100	6.90				753	912
150	10.34				1085	1315
200	13.79				1418	1717
250	17.24				1750	2120
300	20.69				2082	
350	24.14				2414	
400	27.59				2746	
450	31.03				3079	
500	34.48				3411	
522	36.00				3557	

Atmospheric Discharge Safety Relief Valves

for compressed air or gases

Seetru Limited

Type 73008

Safety valves made from Brass <
Atmospheric discharge with threaded connections <

Example Applications

- Compressors
- Pressure vessels
- Pneumatic systems
- Transport and railway systems

Specifications

- Inlet connections: ¼" to 1/2"
- Temperature:-40°C to +200°C (depending on seal material)
- Pressure range: 0.27 to 17.5 bar

Approvals

- Designed in accordance with BS EN ISO-4126-1 &-7
- PED 2014/68/EU (CE)
- PE(S)R UK SI 2016 No. 1105 (UKCA)

Materials of Construction

Component	Material	Grade
Body	Brass	BS2874 CZ121
Internal Parts	Brass	BS2874 CZ122
Spring	Stainless Steel	BS2056 302S26

Seal Materials

Seal Material	Temperature Range
Viton® (FKM)	-15°C to +200°C
Nitrile (NBR)	-40°C to +120°C

Easing Gear / Lifting Gear Options

- **Standard option** – Rota-lift cap, twist type
- **Other option** - Spindle lift

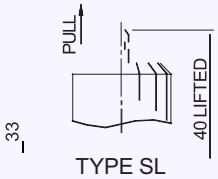

TYPE SL
CRIMPED SPINDLE-LIFT
EASING GEAR

Technical information by bore size

Bore size	7.9mm		
Inlet Size	1/4"	3/8"	1/2"
Flow Area	49mm²		
H - Height (Rota-lift cap)	46mm		
TÜV alloted outflow coefficient 1	0.66		
Weight (approximate) Kg	0.15		
Set Pressure range - PED (CE) bar	**0.27 to 17.5**		
Relieving pressure/fully open pressure	**Set Pressure +10%** (0.1 bar below 1.0 bar)		
Reseating pressure	**Set pressure -10%** (0.3 bar below 3.0 bar)		

1 TÜV alloted outflow coefficients for pressures above 3.0 bar, for lower pressures please see the flow rate tables or contact Seetru.

Valves with Rota-lift Easing Gear

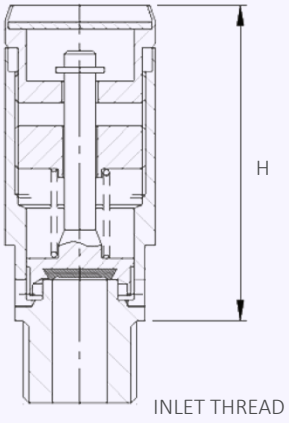

Standard Thread Connection Types

- BSP Parallel male thread
- BSP Taper male thread
- NPT male thread

Valve Selection Guide

Approval Required	Valve type	Select Bore	Inlet Size	Thread Type	Easing Gear	Seal Material
PED (CE)	73008	8mm	Select inlet size from above table	Select thread type	Select easing gear (rota-lift is the standard option)	Viton®
						Nitrile

EAC marking available upon request

***Please send your selected details to Seetru and we can provide the full ordering code, price and lead-time.**

Example of Valve Selection Process

Example Selection	CE	73008	8	1/4"	BSP Taper	Rota-lift	Viton	8.5 bar
	Approval	Valve Type	Bore = 8mm	Inlet Size	Thread Type	Easing Gear	Seal	Set Pressure

Capacity Table - In accordance with TÜV, AIR at 0°C and 1013mbar. Normal m³/hour
Type 73008: Flow rates at 10% above the set pressure

Set Pressure		Bore Size (D0)				
		7.9mm				
bar	psi	Nm³/Hour				
0.27	3.915	27.5				
0.5	7.25	34.7				
1	14.5	46.6				
1.5	21.75	58.7				
2	29	70.8				
3	43.5	95.0				
4	58	119.3				
5	72.5	143.5				
6	87	167.7				
7	101.5	192.0				
8	116	216.2				
9	130.5	240.4				
10	145	264.7				
11	159.5	288.9				
12	174	313.2				
15	217.5	385.9				
17.5	253.75	446.5				

Atmospheric Discharge Safety Relief Valves

for compressed air or gases

Seetru Limited

Type 74008

Safety valves made from Stainless Steel <
Atmospheric discharge with threaded connections <

Example Applications

- Compressors
- Pressure vessels
- Pneumatic systems
- Transport and railway systems

Specifications

- Inlet connections: ¼" to 1/2"
- Temperature:-40°C to +200°C (depending on seal material)
- Pressure range: 0.27 to 17.5 bar

Approvals

- Designed in accordance with BS EN ISO-4126-1 &-7
- PED 2014/68/EU (CE)
- PE(S)R UK SI 2016 No. 1105 (UKCA)

Materials of Construction

Component	Material	Grade
Body	Stainless Steel	BS970 316S31
Internal Parts	Stainless Steel	BS970 316S31
Spring	Stainless Steel	BS2056 302S26

Seal Materials

Seal Material	Temperature Range
Viton® (FKM)	-15°C to +200°C
Nitrile (NBR)	-40°C to +120°C

Easing Gear / Lifting Gear Options

- **Standard option** – Rota-lift cap, twist type
- **Other option** - Spindle lift

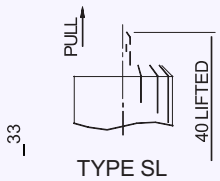

TYPE SL
CRIMPED SPINDLE-LIFT
EASING GEAR

Technical information by bore size

Bore size	7.9mm		
Inlet Size	1/4"	3/8"	1/2"
Flow Area	49mm²		
H - Height (Rota-lift cap)	46mm		
TÜV alloted outflow coefficient 1	0.66		
Weight (approximate) Kg	0.15		
Set Pressure range - PED (CE) bar	**0.27 to 17.5**		
Relieving pressure/fully open pressure	**Set Pressure +10%** (0.1 bar below 1.0 bar)		
Reseating pressure	**Set pressure -10%** (0.3 bar below 3.0 bar)		

1 TÜV alloted outflow coefficients for pressures above 3.0 bar, for lower pressures please see the flow rate tables or contact Seetru.

Valves with Rota-lift Easing Gear

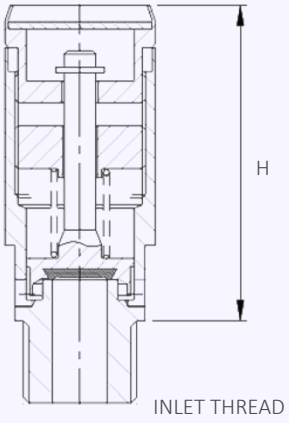

Standard Thread Connection Types

- BSP Parallel male thread
- BSP Taper male thread
- NPT male thread

Valve Selection Guide

Approval Required	Valve type	Select Bore	Inlet Size	Thread Type	Easing Gear	Seal Material
PED (CE)	74008	8mm	Select inlet size from above table	Select thread type	Select easing gear (rota-lift is the standard option)	Viton®
						Nitrile

EAC marking available upon request

***Please send your selected details to Seetru and we can provide the full ordering code, price and lead-time.**

Example of Valve Selection Process

Example Selection	CE	74008	8	1/4"	BSP Taper	Rota-lift	Viton	8.5
	Approval	Valve Type	Bore = 8mm	Inlet Size	Thread Type	Easing Gear	Seal	Set Pressure

Capacity Table - In accordance with TÜV, AIR at 0°C and 1013mbar. Normal m³/hour
Type 74008: Flow rates at 10% above the set pressure

Set Pressure		Bore Size (D0)				
		7.9mm				
bar	psi	Nm³/Hour				
0.27	3.915	27.5				
0.5	7.25	34.7				
1	14.5	46.6				
1.5	21.75	58.7				
2	29	70.8				
3	43.5	95.0				
4	58	119.3				
5	72.5	143.5				
6	87	167.7				
7	101.5	192.0				
8	116	216.2				
9	130.5	240.4				
10	145	264.7				
11	159.5	288.9				
12	174	313.2				
15	217.5	385.9				
17.5	253.75	446.5				

Atmospheric Discharge Safety Relief Valves

for compressed air or gases

Seetru Limited

Type 106 / 116

Safety valves made from Brass or Aluminum <
Atmospheric discharge with threaded connections – FKS approved <

Example Applications

- Compressors
- Pressure vessels
- Pneumatic systems
- Particle laden air/gas (FKS)
- Transport vehicles

Specifications

- Inlet connections: 1” to 2”
- Temperature:-40°C to +200°C (depending on seal material)
- Pressure range: 0.5 to 12.0 bar

Approvals

- FKS approval for particle laden gases
- Designed in accordance with BS EN ISO-4126-1 &-7
- PED 2014/68/EU (CE)
- PE(S)R UK SI 2016 No. 1105 (UKCA)
- ASME BPVC VIII.1 & XIII (UV)
- CRN

Materials of Construction

Component	Material	Grade
Inlet	Brass	CW614N
	Aluminium Alloy	6082
Body	Brass	CW614N
	Aluminium Alloy	6082
Internal parts	Brass	CW614N
	Aluminium Alloy	6082
Spring	Stainless Steel	1.4310 (302)

Seal Materials

Seal Material	Temperature Range
Viton® (FKM)	-15°C to +200°C
Nitrile (NBR)	-40°C to +120°C

Easing Gear / Lifting Gear Options

- Standard option – Rota-lift cap, twist type

Other options:
[1]Downward deflecting shroud available

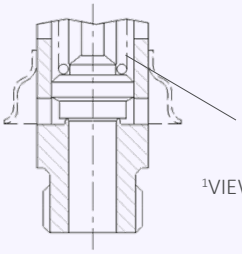

[1]VIEW SHOWING OPTIONAL SHROUD AVAILABLE

Technical information by bore size

Bore Size	25mm			
Inlet Size	1"	1 1/4"	1 1/2"	2"
Flow Area	491mm²			
H - Height (Rota-lift cap version)	172mm			
TÜV allotted outflow coefficient [1]	0.79 (above 0.8 bar) 0.70 (0.8 bar and below)			
NB Certified rated slope (ASME)	11.3 scfm/psia			
Weight (approximate) Kg	2.8 (for brass valve)			
Set Pressure range - PED (CE) bar	0.5-12.0 bar			
Set Pressure range - ASME (UV) psi	7.25-174.0 bar			
Relieving pressure/fully open pressure	Set pressure +10%			
Reseating pressure	Set pressure-10%			

Valves with Rota-lift Easing Gear

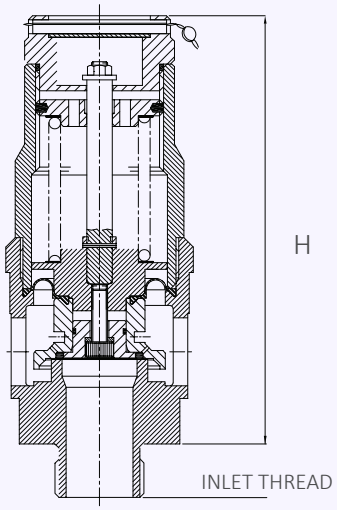

Standard Thread Connection Types

- BSP Parallel male thread
- BSP Taper male thread
- NPT male thread

Valve Selection Guide

Approval Required	Valve type	Bore Size	Inlet Size	Thread Type	Easing Gear	Downward Deflecting Shroud Required?	Seal Material
PED (CE)	106 (Brass valve)	25=25mm	Select inlet size from above table	Select thread type	Select easing gear (rota-lift is the standard option)	Yes or No	Viton® (FKM)
	116 (Aluminium valve)						
PED (CE), ASME (UV) & CRN	101 (Brass valve)						Nitrile (NBR)
	111 (Aluminium valve)						

EAC marking available upon request

***Please send your selected details to Seetru and we can provide the full ordering code, price and lead-time.**

Example of Valve Selection Process

Example Selection	CE	106	25	1"	BSP Taper	Rota-lift	Shroud?	Viton	3.1 bar
	Approval	Valve Type	Bore = 25mm	Inlet Size	Thread Type	Easing Gear	No	Seal	Set Pressure

Capacity Table - In accordance with TÜV, AIR at 0°C and 1013mbar. Normal m³/hour

Type 106/116: Flow rates at 10% above the set pressure

Set Pressure		Bore Size (D0)				
		25mm				
bar	Psi g	Nm³/Hour				
0.5	7.25	369				
1	14.5	558				
2	29	848				
3	43.5	1139				
4	58	1429				
5	72.5	1720				
6	87	2010				
7	101.5	2301				
8	116	2592				
9	130.5	2882				
10	145	3173				
11	159.5	3463				
12	174	3754				

Capacity Table - In accordance with ASME BPVC.XIII, AIR at 60°F and 14.7 psia/scfm. SCFM

Type 106/116: Flow rates at 10% above the set pressure.

Set Pressure		Bore Size (D0)				
		25mm				
psi	bar	SCFM				
7.25	0.50	282				
10	2.50	313				
20	1.38	426				
30	2.80	539				
40	2.76	663				
50	3.45	786				
60	4.14	912				
70	4.83	1036				
80	5.52	1161				
90	6.21	1285				
100	6.90	1409				
150	10.34	2031				
174	12.00	2329				

Atmospheric Discharge Safety Relief Valves

for compressed air or gases

Seetru Limited

Type 31140

Safety valves made from Brass <
Atmospheric discharge with threaded connections <

Example Applications

- Compressors including PET compressors
- Pressure vessels
- Pneumatic systems

Specifications

- Inlet connections: 2” (or 2 ½” using adapter)
- Temperature:-40°C to +200°C (depending on seal material)
- Pressure range: 2.8 to 9.4 bar

  (2.8 to 3.8, 4.3 to 4.5, 5.5 & 7.7 to 9.4 bar)

Approvals

- Designed in accordance with BS EN ISO-4126-1 &-7
- PED 2014/68/EU (CE)
- PE(S)R UK SI 2016 No. 1105 (UKCA)

Materials of Construction

Component	Material	Grade
Inlet	Brass	BS2874 CZ121
Body	Brass	BS2874 CZ121
Internal parts	Brass	BS2874 CZ121
Spring	Carbon Steel	BS5216

Seal Materials

Seal Material	Temperature Range
Viton® (FKM)	-15°C to +200°C
Nitrile (NBR)	-40°C to +120°C

Easing Gear / Lifting Gear Options

- Standard option: knob-lift

Technical information by bore size

Bore size	37.5mm	
Inlet Size	2"	2 1/2"
Flow Area	1104.5mm²	
H - Height	230mm	
TÜV alloted outflow coefficient	0.74	
Weight (approximate) Kg	4.0 kg	
Set Pressure range - PED (CE) bar	2.8 to 9.4 bar	
Relieving pressure/fully open pressure	Set pressure +10%	
Reseating pressure	Set pressure-10%	

Valves with Rota-lift Easing Gear

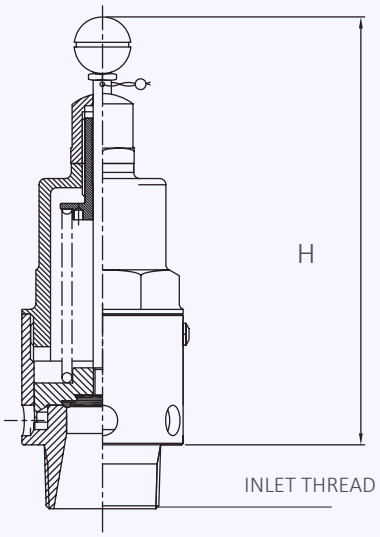

Standard Thread Connection Types

- BSP Parallel male thread
- BSP Taper male thread
- NPT male thread

Valve Selection Guide

Approval Required	Valve type	Inlet Size	Thread Type	Easing Gear	Seal Material
PED (CE)	31140	Select inlet size from above table	Select thread type	Knob-lift only	Viton® (FKM)
					Nitrile (NBR)

EAC marking available upon request

***Please send your selected details to Seetru and we can provide the full ordering code, price and lead-time.**

Example of Valve Selection Process

Example Selection	CE	31140	2"	BSP Taper	Rota-lift	Viton	3.5 bar
	Approval	Valve Type	Inlet Size	Thread Type	Knob-Lift	Seal	Set Pressure

Capacity Table - In accordance with TÜV, AIR at 0°C and 1013mbar. Normal m³/hour

Type 31140: Flow rates at 10% above the set pressure

Set Pressure		Bore Size (D0)				
		37.5mm				
bar	psi	Nm³/Hour				
2.8	40.6	2278				
3.8	55.1	2891				
4.3	62.35	3197				
4.5	65.25	3319				
5.5	79.75	3932				
7.7	111.65	5279				
8	116	5463				
9	130.5	6075				
9.4	136.3	6320				

Atmospheric Discharge Safety Relief Valves

for compressed air or gases

Seetru Limited

Type 31180

Safety valves made from Brass <
Atmospheric discharge with threaded connections <

Example Applications

- Compressors
- Pressure vessels
- Pneumatic systems
- High pressure systems

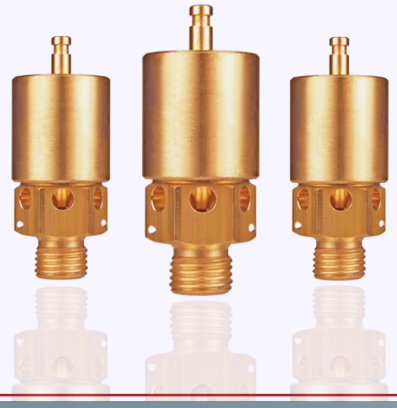

Specifications

- Inlet connections: ¼" or 3/8"
- Temperature:-40°C to +200°C (depending on seal material)
- Pressure range: 20.6 to 134.5 bar

Approvals

- Designed in accordance with BS EN ISO-4126-1 &-7
- PED 2014/68/EU (CE)
- PE(S)R UK SI 2016 No. 1105 (UKCA)

Materials of Construction

Component	Material	Grade
Inlet	Brass	CW614N
Body	Brass	CW614N
Internal parts	Brass	CW614N
Spring	Stainless Steel	302

Seal Materials

Seal Material	Temperature Range
Viton® (FKM)	-15°C to +200°C
Nitrile (NBR)	-40°C to +120°C

Easing Gear / Lifting Gear Options

- Standard option – Spindle Lift

Technical information by bore size

Bore size	3.2mm	
Inlet Size	1/4"	3/8"
Flow Area	8.0mm²	
H - Height	42mm	
TÜV alloted outflow coefficient	0.54	
Weight (approximate) Kg	0.4	
Set Pressure range - PED (CE) bar	20.6 to 134.5 bar	
Relieving pressure/fully open pressure	Set pressure +10%	
Reseating pressure	Set pressure-15%	

Valves with Rota-lift Easing Gear

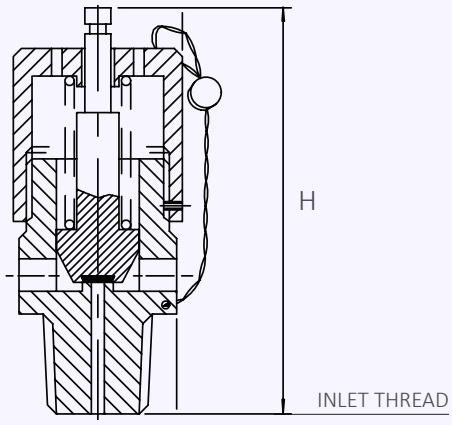

Standard Thread Connection Types

- BSP Parallel male thread (1/4” or 3/8”)
- BSP Taper male thread (1/4”)
- NPT male thread (1/4”)

Valve Selection Guide

Approval Required	Valve type	Inlet Size	Thread Type	Easing Gear	Seal Material
PED (CE)	31180	Select inlet size from above table	Select thread type	Spindle lift only	Viton® (FKM)
					Nitrile (NBR)

EAC marking available upon request
***Please send your selected details to Seetru and we can provide the full ordering code, price and lead-time.**

Example of Valve Selection Process

Example Selection	CE	31180	1/4"	BSP Taper	Spindle Lift	Viton	100 bar
	Approval	Valve Type	Inlet Size	Thread Type	Easing Gear	Seal	Set Pressure

Capacity Table - In accordance with TÜV, AIR at 0°C and 1013mbar. Normal m³/hour

Type 31180: Flow rates at 10% above the set pressure

Set Pressure		Bore Size (D0)				
		3.2mm				
bar	**psi**	Nm³/Hour				
20.6	**298.7**	70.0				
30.0	**435.0**	100.6				
40.0	**580.0**	133.2				
50.0	**725.0**	165.7				
60.0	**870.0**	198.2				
70.0	**1015.0**	230.8				
80.0	**1160.0**	263.3				
100.0	**1450.0**	328.4				
110.0	**1595.0**	360.9				
120.0	**1740.0**	393.5				
130.0	**1885.0**	426.0				
134.5	**1950.3**	440.7				

Atmospheric Discharge Safety Relief Valves

for compressed air or gases

Seetru Limited

Type 31210

Safety valves made from Brass <
Atmospheric discharge with threaded connections <

Example Applications

- Compressors
- Pressure vessels
- Pneumatic systems
- High pressure systems

Specifications

- Inlet connections: 3/8" to ¾"
- Temperature:-40°C to +200°C (depending on seal material)
- Pressure range: 48.2 to 241.4 bar

Approvals

- Designed in accordance with BS EN ISO-4126-1 &-7
- PED 2014/68/EU (CE)
- PE(S)R UK SI 2016 No. 1105 (UKCA)

Materials of Construction

Component	Material	Grade
Inlet	Stainless Steel	304S15
Body	Brass	BS2874 CZ121
Internal parts	Brass & Stainless Steel	BS2874 CZ121 & 303S32
Spring	Stainless Steel	302

Seal Materials

Seal Material	Temperature Range
Viton® (FKM)	-15°C to +200°C
Nitrile (NBR)	-40°C to +120°C

Easing Gear / Lifting Gear Options

Standard option – No easing gear. Fitted with downward deflecting shroud

Optional – Lever lift easing gear

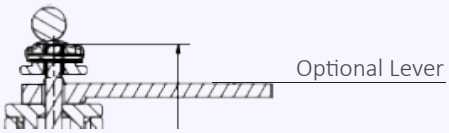

Technical information by bore size

Bore size	3.2mm		
Inlet Size	3/8"	1/2"	3/4"
Flow Area	10.46mm²		
H - Height	94mm		
TÜV alloted outflow coefficient	0.68		
Weight (approximate) Kg	0.5		
Set Pressure range - PED (CE) bar	48.2 to 241.4		
Relieving pressure/fully open pressure	Set pressure +10%		
Reseating pressure	Set pressure-15%		

Valves with Rota-lift Easing Gear

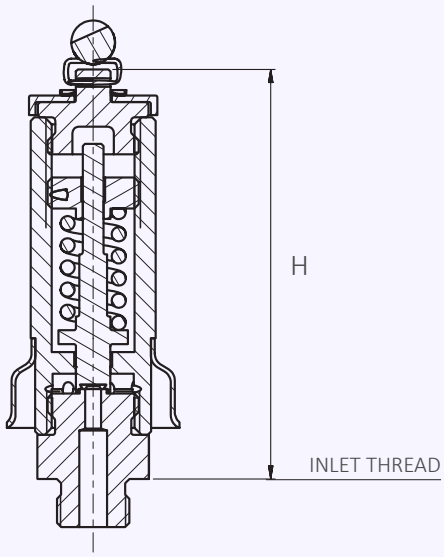

Standard Thread Connection Types

- BSP Parallel male thread (3/8”,1/2” or 3/4”)
- BSP Taper male thread (3/8” or 1/2”)
- NPT male thread (1/2”)

Valve Selection Guide

Approval Required	Valve type	Inlet Size	Thread Type	Easing Gear	Seal Material
PED (CE)	31210	Select inlet size from above table	Select thread type	None	Viton® (FKM)
					Nitrile (NBR)

EAC marking available upon request

***Please send your selected details to Seetru and we can provide the full ordering code, price and lead-time.**

Example of Valve Selection Process

Example Selection	CE	31210	1/2"	BSP parallel	None	Viton	100 bar
	Approval	Valve Type	Inlet Size	Thread Type	Easing Gear	Seal	Set Pressure

Capacity Table - In accordance with TÜV, AIR at 0°C and 1013mbar. Normal m³/hour

Type 31210: Flow rates at 10% above the set pressure

Set Pressure		Bore Size (D0)				
		3.65mm				
bar	psi	Nm³/Hour				
48.2	698.9	261.8				
50.0	725.0	271.5				
60.0	870.0	324.8				
70.0	1015.0	378.1				
80.0	1160.0	431.4				
90.0	1305.0	484.7				
100.0	1450.0	538.0				
150.0	2175.0	804.6				
200.0	2900.0	1071.1				
240.0	3480.0	1284.1				
241.4	3500.3	1292.1				

Atmospheric Discharge Safety Relief Valves

for compressed air or gases

Seetru Limited

Type 55004

Safety valves made from Brass <
Atmospheric discharge with threaded connections <

Example Applications

- Compressors
- Pressure vessels
- Pneumatic systems
- High pressure systems

Specifications

- Inlet connections: 1/4” to 1/2”
- Temperature: 0°C to 100°C
- Pressure range:
  - 69.0 to 448.2 bar (3/8” and 1/2”)
  - 69.0 to 345.0 bar (1/4”)

Materials of Construction

Component	Material	Grade
Inlet	Stainless Steel	BS EN 10272 GR 1.4401
Body	Brass	BS EN 12164 CW614N
Adjuster	Brass	BS EN 12164 CW614N
Spring	Carbon Steel	BS2803 685A55 R2
Plunger	Stainless Steel	BS EN 10272 GR 1.4057

Approvals

- Designed in accordance with BS EN ISO-4126-1 &-7
- PED 2014/68/EU (CE)
- PE(S)R UK SI 2016 No. 1105 (UKCA)

Seal Materials

Seal Material	Temperature Range
Viton® (FKM)	0°C to 100°C
Nitrile (NBR)	0°C to 100°C

Easing Gear / Lifting Gear Options

Standard option – No easing gear.

Technical information by bore size

Bore size	3.73mm		
Inlet Size	1/4"	3/8"	1/2"
Flow Area	10.95mm²		
H - Height	90mm		
TÜV alloted outflow coefficient	0.082		
Weight (approximate) Kg	0.5		
Set Pressure range - PED (CE) bar	69 to 448.2 bar (Max. 345 bar for 1/4")		
Relieving pressure/fully open pressure	Set pressure +10%		
Reseating pressure	Set pressure-15%		

Valves with Rota-lift Easing Gear

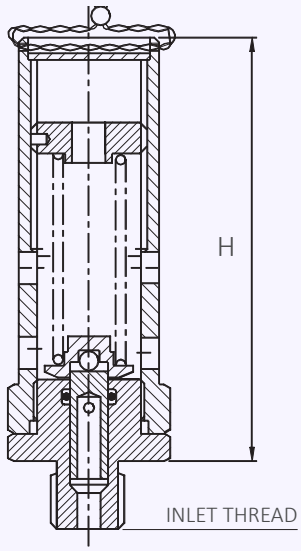

Standard Thread Connection Types

- BSP Parallel male thread

Valve Selection Guide

Approval Required	Valve type	Inlet Size	Thread Type	Easing Gear	Seal Material
PED (CE)	55004	Select inlet size from above table	Select thread type	None	Viton® (FKM)
					Nitrile (NBR)

EAC marking available upon request

***Please send your selected details to Seetru and we can provide the full ordering code, price and lead-time.**

Example of Valve Selection Process

Example Selection	CE	55004	1/2"	BSP parallel	None	Viton	100 bar
	Approval	Valve Type	Inlet Size	Thread Type	Easing Gear	Seal	Set Pressure

Capacity Table - In accordance with TÜV, AIR at 0°C and 1013mbar. Normal m³/hour

Type 55004: Flow rates at 10% above the set pressure

Set Pressure		Bore Size (D0)				
		3.73				
bar	psi	Nm³/Hour				
69.0	1000.5	46.9				
100.0	1450.0	67.8				
150.0	2175.0	101.3				
200.0	2900.0	134.9				
250.0	3625.0	168.5				
300.0	4350.0	202.0				
350.0	5075.0	235.6				
400.0	5800.0	269.2				
448.0	6496.0	301.4				

LGS

SEETRU

Reliable Protection

For Liquid, Gas, and Steam Applications

About the LGS Safety Valve Range

The Seetru LGS® Multi-Purpose Safety Relief Valve range represents a state-of-the-art design with dual guided spindle as well as the Seetru Rock-Seal™ seal technology for repeatable high-performance sealing. It is a high-quality valve of modular design and construction incorporating the Seetru proprietary compact design technology – providing a highly cost-effective range of valve solutions. LGS® valves have a robust and reliable construction designed for the widest range of industrial applications.

www.seetru.com/lgs-safety-relief-valves

www.seetru.com | info@seetru.com | +44 (0) 117 930 6100

2pm

Same-Day Despatch

Order Before 2pm on a Seetru Business Day

About the Seetru Same-Day Despatch Range

Seetru offers atmospheric and piped discharge relief valves with brass or stainless steel construction. Also available is our LGS and LGS HI-FLOW range, these multi-purpose safety valves are manufactured in bronze and are suitable for liquid, gas, and steam applications. The Seetru P3W Pressure & Temperature Relief Valve provides protection against both excess temperature as well as over pressurisation.

Visit SeetruDirect.com

LGS® Safety Relief Valves

for liquid | hot water | compressed air & gas | steam

Seetru Limited

LGS®

Safety valves made from Brass <
Enclosed discharge with threaded connections <

Example Applications

- Hot water, including boilers (vented and unvented)
- Steam boilers and steam plants
- Pump and thermal relief
- Bypass relief
- Process liquids and gases
- Pressure vessels and lines
- Heating and cooling systems
- Heat exchangers and industrial cooling systems
- Refrigeration systems
- Pressure booster systems
- Solar power systems
- District heating systems

Specifications

- Size range: DN15 to DN65
  (1/2" to 2 1/2" BSP female connections)
- Temperature: -60°C to +200°C
  (with PTFE seals (EPDM-45°C to +140°C)
- Pressure range: 0.2 to 24 bar (depending on seal and duty)

Approvals

- Designed in accordance with BS EN ISO-4126-1 &-7
- PED 2014/68/EU (CE)
- PE(S)R UK SI 2016 No. 1105 (UKCA)
- WRAS
- KUKReg 4

Materials of Construction

	COMPONENT	MATERIAL
1	Seat	Dezincification Resistant Material
2	Lift Aid Assembly	Dezincification Resistant Material
3	Body	Bronze CC491K / C83600
4	Piston	Dezincification Resistant Material
5	Spring	Steel 1.4401
6	Adjuster	Brass
7	Cap	Brass
8	Cover	Brass
9	Lever	Brass
10	Wire Lock	Steel & Lead
11	O-Ring	EPDM
12	Locking Slug	Nylon
13	Spindle	Stainless Steel
14	Seal	PTFE or EPDM

Valve Drawing

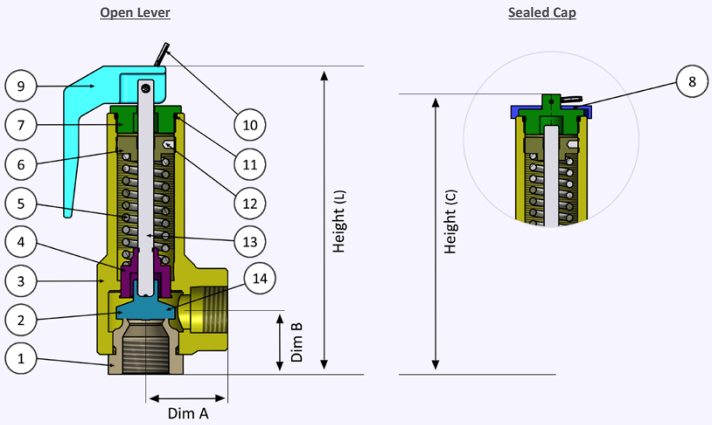

Dimensions

Size (Inlet x Outlet)	Dim A mm (inches)	Dim B mm (inches)	Height (L) mm (inches)	Height (C) mm (inches)
DN15 (½")	33.0 (1.29)	26.0 (1.02)	124.0 (4.88)	114.5 (4.51)
DN20 (¾")	37.0 (1.46)	32.0 (1.26)	130.0 (5.12)	120.5 (4.74)
DN25 (1")	42.0 (1.65)	37.0 (1.46)	156.0 (6.14)	146.5 (5.77)
DN32 (1 ¼")	50.0 (1.97)	42.0 (1.65)	174.0 (6.85)	164.5 (6.48)
DN40 (1 ½")	59.0 (2.32)	50.0 (1.97)	222.5 (8.76))	211.5 (8.33)
DN50 (2")	69.0 (2.72)	59.0 (2.32)	256.5 (9.70)	246.5 (9.70)
DN65 (2 ½")	78.0 (3.07)	83.5 (3.28)	320 (12.60)	310 (12.20)

Easing Gear / Lifting Gear Options

- **Options:**

Unsealed lever (not gas tight) Sealed Cap (gas tight cap)

Discharge Capacities: *LGS Safety Relief Valves*

Discharge capacity for WATER at 10% over-pressure[1,2] — Kdr = 0.26

Valve size	DN In	15mm (½")		20mm (¾")		25mm (1")		32mm (1¼")		40mm (1½")		50mm (2")	
	DN Out	15mm (½")		20mm (¾")		25mm (1")		32mm (1¼")		40mm (1½")		50mm (2")	
	d_o (mm)	13.5		15		20		25		32		40	
Set pressure (bar)	Set pressure (psi)	kg/hr	GPM (US)	kg/hr	GPM (US)	kg/hr	GPM (US)	kg/hr	GPM (US)	kg/hr	GPM (US)	kg/hr	GPM (US)
0.2	2.9	849.7	3.7	1097.2	4.8	1950.6	8.6	3047.8	13.4	4993.4	22.0	7802.3	34.4
1.0	14.5	1899.9	8.4	2453.4	10.8	4361.6	19.2	6815.0	30.0	11165.7	49.2	17446.4	76.9
2.0	29.0	2686.9	11.8	3469.6	15.3	6168.2	27.2	9637.9	42.5	15790.7	69.6	24672.9	108.8
4.0	58.0	3799.8	16.8	4906.8	21.6	8723.2	38.5	13630.0	60.1	22331.4	98.5	34892.8	153.8
6.0	87.0	4653.8	20.5	6009.6	26.5	10683.7	47.1	16693.3	73.6	27350.2	120.6	42734.7	188.4
8.0	116.0	5373.8	23.7	6939.3	30.6	12336.5	54.4	19275.7	85.0	31581.3	139.2	49345.8	217.6
10.0	145.0	6008.0	26.5	7758.3	34.2	13792.6	60.8	21550.9	95.0	35309.0	155.7	55170.3	243.3
12.0	174.0	6581.5	29.0	8498.8	37.5	15109.0	66.6	23607.8	104.1	38679.1	170.5	60436.0	266.5
15.0	217.5	7358.3	32.4	9502.0	41.9	16892.4	74.5	26394.4	116.4	43244.5	190.7	67569.6	297.9
20.0	290.0	8496.7	37.5	10971.9	48.4	19505.7	86.0	30477.6	134.4	49934.5	220.2	78022.6	344.0
24.0	348.0	9307.6	41.0	12019.1	53.0	21367.4	94.2	33386.5	147.2	54700.5	241.2	85469.5	376.9

[1] *Metric units are calculated to BS EN ISO4126-7:2013 and displayed in their customary units*
[2] *Imperial units are calculated to ASME Section VIII Division 1 and displayed in their customary units*

Discharge capacity for HOT WATER at 10% over-pressure (Unvented Systems)[1] — Kdr = 0.38

Valve size	DN In	15mm (½")		20mm (¾")		25mm (1")		32mm (1¼")		40mm (1½")		50mm (2")	
	DN Out	15mm (½")		20mm (¾")		25mm (1")		32mm (1¼")		40mm (1½")		50mm (2")	
	d_o (mm)	13.5		15		20		25		32		40	
Set pressure (bar)	Set pressure (psi)	kW	BTU/sec	kW	BTU/sec	kW	BTU/sec	kW	BTU/sec	kW	BTU/sec	kW	BTU/sec
0.2	2.9	21.1	20.0	27.2	25.8	48.4	45.9	75.7	71.7	124.0	117.5	193.7	183.6
1.0	14.5	36.2	34.3	46.7	44.2	83.0	78.7	129.7	122.9	212.5	201.4	332.0	314.6
2.0	29.0	55.0	52.1	71.0	67.3	126.2	119.6	197.2	186.9	323.1	306.2	504.8	478.4
4.0	58.0	92.6	87.8	119.6	113.3	212.6	201.5	332.2	314.9	544.3	515.9	850.4	806.0
6.0	87.0	130.2	123.5	168.2	159.4	299.0	283.4	467.2	442.8	765.5	725.5	1196.0	1133.6
8.0	116.0	167.9	159.1	216.8	205.5	385.4	365.3	602.2	570.8	986.7	935.2	1541.7	1461.2
10.0	145.0	205.5	194.8	265.4	251.6	471.8	447.2	737.2	698.8	1207.9	1144.8	1887.3	1788.8
12.0	174.0	243.2	230.5	314.0	297.6	558.2	529.1	872.2	826.7	1429.1	1354.5	2232.9	2116.4
15.0	217.5	299.6	284.0	386.9	366.7	687.8	652.0	1074.8	1018.7	1760.9	1669.0	2751.4	2607.8
20.0	290.0	393.7	373.2	508.4	481.9	903.9	856.7	1412.3	1338.6	2313.9	2193.1	3615.5	3426.8
24.0	348.0	469.0	444.5	605.6	574.0	1076.7	1020.5	1682.3	1594.5	2756.3	2612.5	4306.7	4082.0

[1] *Calculations based on Hot Water at or above 100°C, using the Kdr of Gas*
[2] *Calculations are in accordance to BS EN ISO 4126-1:2004 National Annex NA*

Discharge capacity for AIR at 10% over-pressure[1,2,3] — Kdr = 0.38

Valve size	DN In	15mm (½")		20mm (¾")		25mm (1")		32mm (1¼")		40mm (1½")		50mm (2")	
	DN Out	15mm (½")		20mm (¾")		25mm (1")		32mm (1¼")		40mm (1½")		50mm (2")	
	d_o (mm)	13.5		15		20		25		32		40	
Set pressure (bar)	Set pressure (psi)	l/sec	SCFM	l/sec	SCFM	l/sec	SCFM	l/sec	SCFM	l/sec	SCFM	l/sec	SCFM
0.2	2.9	12.5	26.5	16.1	34.2	28.6	60.7	44.7	94.9	73.2	155.5	114.4	243.0
1.0	14.5	21.4	45.3	27.6	58.6	49.0	104.1	76.6	162.7	125.5	266.5	196.1	416.4
2.0	29.0	32.5	69.0	41.9	89.0	74.5	158.3	116.5	247.3	190.8	405.2	298.2	633.2
4.0	58.0	54.7	116.2	70.6	150.0	125.6	266.7	196.2	416.7	321.5	682.7	502.3	1066.7
6.0	87.0	76.9	163.4	99.3	211.0	176.6	375.1	276.0	586.0	452.1	960.1	706.5	1500.2
8.0	116.0	99.2	210.6	128.1	271.9	227.7	483.4	355.7	755.4	582.8	1237.6	910.6	1933.7
10.0	145.0	121.4	257.8	156.8	332.9	278.7	591.8	435.5	924.7	713.5	1515.0	1114.8	2367.3
12.0	174.0	143.6	305.0	185.5	393.9	329.7	700.2	515.2	1094.1	844.1	1792.5	1318.9	2800.8
15.0	217.5	177.0	375.8	228.5	485.3	406.3	862.8	634.8	1348.1	1040.1	2208.7	1625.2	3451.1
20.0	290.0	290.0	493.8	300.3	637.7	533.9	1133.7	834.2	1771.4	1366.8	2902.3	2135.6	4534.9
24.0	348.0	277.0	588.3	357.7	759.6	636.0	1350.5	993.7	2110.1	1628.1	3457.2	2543.9	5401.9

[1] *Metric units are calculated to BS EN ISO4126-7:2013 and converted to l/sec at 1.013 bar a. @ 15°C*
[2] *Imperial units are calculated to ASME Section VIII Division 1 and displayed in their customary units*
[3] *To convert from l/sec (1.013 bar a. @ 15°C) to Nm3/hr (1.013 bar a. @ 0°C) multiply by 3.413*

Discharge capacity for SATURATED STEAM at 10% over-pressure[1,2,3,4] — Kdr = 0.38

Valve size	DN In	15mm (½")		20mm (¾")		25mm (1")		32mm (1¼")		40mm (1½")		50mm (2")	
	DN Out	15mm (½")		20mm (¾")		25mm (1")		32mm (1¼")		40mm (1½")		50mm (2")	
	d_o (mm)	13.5		15		20		25		32		40 (mm)	
Set pressure (bar)	Set pressure (psi)	kg/hr	lb/hr	kg/hr	lb/hr	kg/hr	lb/hr	kg/hr	lb/hr	kg/hr	lb/hr	kg/hr	lb/hr
0.2	2.9	29.1	74.2	37.6	95.8	66.9	170.4	104.5	266.2	171.3	436.2	267.6	681.6
1.0	14.5	59.7	127.2	77.1	164.2	137.0	292.0	214.1	456.2	350.8	747.5	548.1	1167.9
2.0	29.0	89.7	193.4	115.8	249.7	205.9	444.0	321.7	693.7	527.1	1136.6	823.6	1775.9
4.0	58.0	148.8	325.8	192.1	420.7	341.5	748.0	533.7	1168.7	874.4	1914.8	1366.2	2991.9
6.0	87.0	207.3	458.2	267.6	591.7	475.8	1052.0	743.4	1643.7	1218.0	2693.0	1903.1	4207.9
8.0	116.0	265.4	590.7	342.7	762.7	609.2	1356.0	951.9	2118.7	1559.5	3471.3	2436.8	5423.8
10.0	145.0	323.3	723.1	417.5	933.7	742.3	1660.0	1159.8	2593.7	1900.3	4249.5	2969.2	6639.8
12.0	174.0	381.1	855.5	492.1	1104.7	874.8	1963.9	1366.9	3068.7	2239.5	5027.7	3499.2	7855.8
14.0	203.0	438.9	987.9	566.7	1275.7	1007.5	2267.9	1574.2	3543.7	2579.2	5805.9	4030.0	9071.8

[1] *Metric units are calculated to BS EN ISO4126-7:2013 and displayed in their customary units*
[2] *Imperial units are calculated to ASME Section VIII Division 1 and displayed in their customary units*
[3] *Calculations for saturated steam only*
[4] *PTFE seals up to 14 bar, EPDM seals up to 2.5 bar - contact Seetru for details on maximum steam pressure for other seal materials*

LGS® HI-FLOW Safety Relief Valves

for liquid | *hot water* | *compressed air & gas* | *steam*

Seetru Limited

LGS®HI-FLOW

Safety valves made from Brass <
Enclosed discharge with threaded connections <

Example Applications

- Hot water, including boilers (vented and unvented)
- Steam boilers and steam plants
- Pump and thermal relief
- Bypass relief
- Process liquids and gases
- Pressure vessels and lines
- Heating and cooling systems
- Heat exchangers and industrial cooling systems
- Refrigeration systems
- Pressure booster systems
- Solar power systems
- District heating systems

Specifications

- Size range: DN15 to DN50 (½" BSP to 2" BSP)
- Temperature: -60°C to +200°C
  (with PTFE seals (EPDM-45°C to +140°C)
- Pressure range: 0.2 to 24 bar (depending on seal and duty)

Approvals

- Designed in accordance with BS EN ISO-4126-1 &-7
- PED 2014/68/EU (CE)
- PE(S)R UK SI 2016 No. 1105 (UKCA)
- WRAS
- KUKReg 4

Materials of Construction

	COMPONENT	MATERIAL
1	Seat	Dezincification Resistant Material
2	Lift Aid Assembly	Dezincification Resistant Material
3	Body	Bronze CC491K / C83600
4	Piston	Dezincification Resistant Material
5	Spring	Steel 1.4401
6	Adjuster	Brass
7	Cap	Brass
8	Cover	Brass
9	Lever	Brass
10	Wire Lock	Steel & Lead
11	O-Ring	EPDM
12	Locking Slug	Nylon
13	Spindle	Stainless Steel
14	Seal	PTFE or EPDM

Valve Drawing

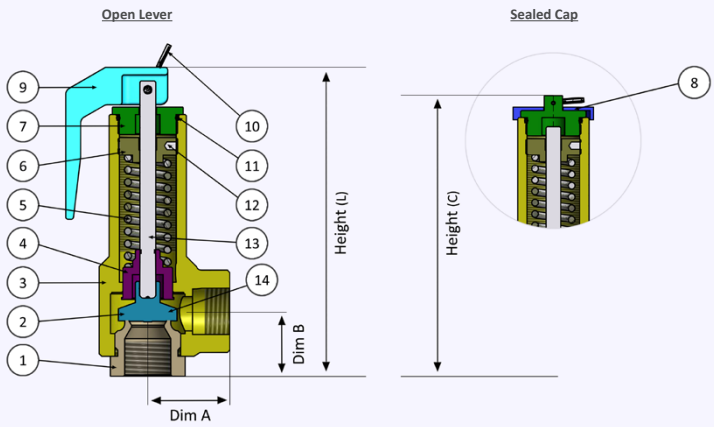

Dimensions

Size (Inlet x Outlet)	Dim A mm (inches)	Dim B mm (inches)	Height (L) mm (inches)	Height (C) mm (inches)
DN15 (½") x DN20 (¾")	37.0 (1.46)	32.0 (1.26)	130.0 (5.12)	120.5 (4.74)
DN20 (¾") x DN25 (1")	42.0 (1.65)	37.0 (1.46)	156.0 (6.14)	146.5 (5.77)
DN25 (1") x DN32(1 ¼")	50.0 (1.97)	42.0 (1.65)	174.0 (6.85)	164.5 (6.48)
DN32 (1 ¼") x DN40 (1 ½")	59.0 (2.32)	50.0 (1.97)	222.5 (8.76)	211.5 (8.33)
DN40 (1 ½") x DN50 (2")	69.0 (2.72)	59.0 (2.32)	256.5 (9.70)	246.5 (9.70)
DN50 (2") x DN65 (2 ½")	78 (3.07)	83.5 (3.28)	320.0 (12.60)	310 (12.20)

Easing Gear / Lifting Gear Options

- **Options:**

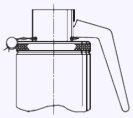

Unsealed lever (not gas tight)

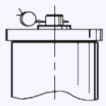

Sealed Cap (gas tight cap)

Discharge Capacities: *LGS HI-FLOW Safety Relief Valves*

HI-FLOW Discharge capacity for WATER at 10% over-pressure[1,2] — Kdr = 0.26

Valve size	DN In	15mm (½")		20mm (¾")		25mm (1")		32mm (1¼")		40mm (1½")		50mm (2")	
	DN Out	20mm (¾")		25mm (1")		32mm (1¼")		40mm (1½")		50mm (2")		65mm (2 1/2")	
	d_o(mm)	15		20		25		32		40		50	
Set pressure (bar)	Set pressure (psi)	kg/hr	GPM (US)	kg/hr	GPM (US)	kg/hr	GPM (US)	kg/hr	GPM (US)	kg/hr	GPM (US)	kg/hr	GPM(US)
0.2	2.9	1097.2	4.8	1950.6	8.6	3047.8	13.4	4993.4	22.0	7802.3	34.4	12191.0	53.7
1.0	14.5	2453.4	10.8	4361.6	19.2	6815.0	30.0	11165.7	49.2	17446.4	76.9	27260.0	120.0
2.0	29.0	3469.6	15.3	6168.2	27.2	9637.9	42.5	15790.7	69.6	24672.9	108.8	38551.4	169.7
3.0	43.5	4249.4	18.7	7554.5	33.3	11803.9	52.0	19339.5	85.1	30218.0	133.1	47215.7	207.9
4.0	58.0	4906.8	21.6	8723.2	38.5	13630.0	60.1	22331.4	98.5	34892.8	153.8	54519.9	240.0
6.0	87.0	6009.6	26.5	10683.7	47.1	16693.3	73.6	27350.2	120.6	42734.7	188.4	66773.0	294.0
8.0	116.0	6939.3	30.6	12336.5	54.4	19275.7	85.0	31581.3	139.2	49345.8	217.6	77102.8	339.5
10.0	145.0	7758.3	34.2	13792.6	60.8	21550.9	95.0	35309.0	155.7	55170.3	243.3	86203.6	379.5
12.0	174.0	8498.8	37.5	15109.0	66.6	23607.8	104.1	38679.1	170.5	60436.0	266.5	94431.3	415.7
15.0	217.5	9502.0	41.9	16892.4	74.5	26394.4	116.4	43244.5	190.7	67569.6	297.9	105577.4	464.8
20.0	290.0	10971.9	48.4	19505.7	86.0	30477.6	134.4	49934.5	220.2	78022.6	344.0	121910.3	536.7
24.0	348.0	12019.1	53.0	21367.4	94.2	33386.5	147.2	54700.5	241.2	85469.5	376.9	133546.0	588.0

[1] *Metric units are calculated to BS EN ISO4126-7:2013 and displayed in their customary units*
[2] *Imperial units are calculated to ASME Section VIII Division 1 and displayed in their customary units*

HI-FLOW Discharge capacity for HOT WATER at 10% over-pressure (Unvented Systems)[1] — Kdr = 0.38

Valve size	DN In	15mm (½")		20mm (¾")		25mm (1")		32mm (1¼")		40mm (1½")		50mm (2")	
	DN Out	20mm (¾")		25mm (1")		32mm (1¼")		40mm (1½")		50mm (2")		65mm (2 1/2")	
	d_o(mm)	15		20		25		32		40		50	
Set pressure (bar)	Set pressure (psi)	kW	BTU/sec	kW	BTU/sec	kW	BTU/sec	kW	BTU/sec	kW	BTU/sec	kW	BTU/sec
0.2	2.9	27.2	25.8	48.4	45.9	75.7	71.7	124.0	117.5	193.7	183.6	302.7	286.9
1.0	14.5	46.7	44.2	83.0	78.7	129.7	122.9	212.5	201.4	332.0	314.6	518.7	491.6
2.0	29.0	71.0	67.3	126.2	119.6	197.2	186.9	323.1	306.2	504.8	478.4	788.7	747.6
3.0	43.5	95.3	90.3	169.4	160.6	264.7	250.8	433.6	411.0	677.6	642.3	1058.8	1003.5
4.0	58.0	119.6	113.3	212.6	201.5	332.2	314.9	544.3	515.9	850.4	806.0	1328.8	1259.4
6.0	87.0	168.2	159.4	299.0	283.4	467.2	442.8	765.5	725.5	1196.0	1133.6	1868.8	1771.3
8.0	116.0	216.8	205.5	385.4	365.3	602.2	570.8	986.7	935.2	1541.7	1461.2	2408.9	2283.2
10.0	145.0	265.4	251.6	471.8	447.2	737.2	698.8	1207.9	1144.8	1887.3	1788.8	2948.9	2795.1
12.0	174.0	314.0	297.6	558.2	529.1	872.2	826.7	1429.1	1354.5	2232.9	2116.4	3489.0	3306.9
15.0	217.5	386.9	366.7	687.8	652.0	1074.8	1018.7	1760.9	1669.0	2751.4	2607.8	4299.0	4074.7
20.0	290.0	508.4	481.9	903.9	856.7	1412.3	1338.6	2313.9	2193.1	3615.5	3426.8	5649.2	5354.4
24.0	348.0	605.6	574.0	1076.7	1020.5	1682.3	1594.5	2756.3	2612.5	4306.7	4082.0	6729.3	6378.1

[1] *Calculations based on Hot Water at or above 100°C, using the Kdr of Gas*
[2] *Calculations are in accordance to BS EN ISO 4126-1:2004 National Annex NA*

HI-FLOW Discharge capacity for AIR at 10% over-pressure[1,2,3] — Kdr = 0.38

Valve size	DN In	15mm (½")		20mm (¾")		25mm (1")		32mm (1¼")		40mm (1½")		50mm (2")	
	DN Out	20mm (¾")		25mm (1")		32mm (1¼")		40mm (1½")		50mm (2")		65mm (2 1/2")	
	d_o(mm)	15		20		25		32		40		50	
Set pressure (bar)	Set pressure (psi)	l/sec	SCFM	l/sec	SCFM	l/sec	SCFM	l/sec	SCFM	l/sec	SCFM	l/sec	SCFM
0.2	2.9	16.1	34.2	28.6	60.7	44.7	94.9	73.2	155.5	114.4	243.0	163.3	346.6
1.0	14.5	27.6	58.6	49.0	104.1	76.6	162.7	125.5	266.5	196.1	416.4	306.4	650.1
2.0	29.0	41.9	89.0	74.5	158.3	116.5	247.3	190.8	405.2	298.2	633.2	495.9	988.5
3.0	43.5	56.2	119.4	100.0	212.3	156.3	331.7	256.1	543.5	400.2	849.2	625.4	1327.0
4.0	58.0	70.6	150.0	125.6	266.7	196.2	416.7	321.5	682.7	502.3	1066.7	784.9	1665.4
6.0	87.0	99.3	211.0	176.6	375.1	276.0	586.0	452.1	960.1	706.5	1500.2	1103.9	2342.2
8.0	116.0	128.1	271.9	227.7	483.4	355.7	755.4	582.8	1237.6	910.6	1933.7	1422.9	3019.1
10.0	145.0	156.8	332.9	278.7	591.8	435.5	924.7	713.5	1515.0	1114.8	2367.3	1741.8	3695.9
12.0	174.0	185.5	393.9	329.7	700.2	515.2	1094.1	844.1	1792.5	1318.9	2800.8	2060.8	4372.7
15.0	217.5	228.5	485.3	406.3	862.8	634.8	1348.1	1040.1	2208.7	1625.2	3451.1	2539.3	5388.0
20.0	290.0	300.3	637.7	533.9	1133.7	834.2	1771.4	1366.8	2902.3	2135.6	4534.9	3336.8	7080.1
24.0	348.0	357.7	759.6	636.0	1350.5	993.7	2110.1	1628.1	3457.2	2543.9	5401.9	3974.8	8433.8

[1] *Metric units are calculated to BS EN ISO4126-7:2013 and converted to l/sec at 1.013 bar a. @ 15°C*
[2] *Imperial units are calculated to ASME Section VIII Division 1 and displayed in their customary units*
[3] *To convert from l/sec (1.013 bar a. @ 15°C) to Nm3/hr (1.013 bar a. @ 0°C) multiply by 3.413*

HI-FLOW Discharge capacity for SATURATED STEAM at 10% over-pressure[1,2,3,4] — Kdr = 0.38

Valve size	DN In	15mm (½")		20mm (¾")		25mm (1")		32mm (1¼")		40mm (1½")		50mm (2")	
	DN Out	20mm (¾")		25mm (1")		32mm (1¼")		40mm (1½")		50mm (2")		65mm (2 1/2")	
	d_o(mm)	15		20		25		32		40		50	
Set pressure (bar)	Set pressure (psi)	kg/hr	lb/hr	kg/hr	lb/hr	kg/hr	lb/hr	kg/hr	lb/hr	kg/hr	lb/hr	kg/hr	lb/hr
0.2	2.9	37.6	95.8	66.9	170.4	104.5	266.2	171.3	436.2	267.6	681.6	426.4	940.2
1.0	14.5	77.1	164.2	137.0	292.0	214.1	456.2	350.8	747.5	548.1	1167.9	856.7	1888.6
2.0	29.0	115.8	249.7	205.9	444.0	321.7	693.7	527.1	1136.6	823.6	1775.9	1286.6	2836.4
3.0	43.5	154.0	339.6	273.9	603.9	428.0	943.6	701.2	1545.9	1095.7	2415.6	1712.0	3774.3
4.0	58.0	192.1	420.7	341.5	748.0	533.7	1168.7	874.4	1914.8	1366.2	2991.9	2134.6	4705.9
6.0	87.0	267.6	591.7	475.8	1052.0	743.4	1643.7	1218.0	2693.0	1903.1	4207.9	2973.6	6555.6
8.0	116.0	342.7	762.7	609.2	1356.0	951.9	2118.7	1559.5	3471.3	2436.8	5423.8	3807.4	8393.8
10.0	145.0	417.5	933.7	742.3	1660.0	1159.8	2593.7	1900.3	4249.5	2969.2	6639.8	4639.3	10227.8
12.0	174.0	492.1	1104.7	874.8	1963.9	1366.9	3068.7	2239.5	5027.7	3499.2	7855.8	5467.4	12053.5
14.0	217.5	566.7	1275.7	1007.5	2267.9	1574.2	3543.7	2579.2	5805.9	4030.0	9071.8	6296.9	13882.1

[1] *Metric units are calculated to BS EN ISO4126-7:2013 and displayed in their customary units*
[2] *Imperial units are calculated to ASME Section VIII Division 1 and displayed in their customary units*
[3] *Calculations for saturated steam only*
[4] *PTFE seals up to 14 bar, EPDM seals up to 2.5 bar - contact Seetru for details on maximum steam pressure for other seal materials*

Pressure & Temperature Relief Valve

for liquid *hot water*

Seetru Limited

P3W

Relief made from Brass

Protection against both excess temperature as well as over pressurisation

Features

- Size range: 1/2" (DN15) to 2 1/2" (DN65)
- Set Pressure Range: 0.4 to 12.5 bar
- Set Temperature: 90 - 95°C
- BSP taper male inlet connections
- BSP parallel outlet connections
- WRAS approved PTFE valve seal and silicone diaphragm
- Sealed lever
- WRAS Approved (all sizes and pressures) – certificate number 2011005
- Designed in accordance with BS EN 1490 (Building valves. Combined temperature and pressure relief valves. Tests and requirements)
- Valves supplied pre-set at the required set pressure and temperature
- Test certificate supplied free of charge

Lever Type

Materials of Construction

	COMPONENT	MATERIAL
1	Inlet	Brass CW602N
2	Thermostat	Brass CW602N
3	Seal Assembly	Brass CW602N & PTFE
4	Body	Bronze CC491K
5	Piston Assembly	Brass CW602N
6	Spring	Stainless Steel 1.4401
7	Adjuster	Brass CW602N
8	Cap	Brass CW602N
9	Wire & Lead-Seal	Stainless Steel & Lead Seal
10	Lever	Bronze

Standards & Approvals

- WRAS approved, meeting the requirements of the UK Water Supply Regulations. Certificate number 2011005.
- Designed in accordance with BS EN 1490 (Building valves. Combined temperature and pressure relief valves. Tests and requirements).

Dimensions

Inlet	Outlet	Dim H (mm)	Dim A (mm)	Dim B (mm)	Dim C (mm)	Dim D (mm)	Dim E (mm)	Weight (kg)
1/2" BSPT (DN15)	1/2" BSPP (DN15)	302	129	144	33	61	32	1.1
3/4" BSPT (DN20)	3/4" BSPP (DN20)	302	129	144	37	62	32	1.1
1" BSPT (DN25)	1" BSPP (DN25)	372	156	176	42	77	37	1.8
1 1/4" BSPT (DN32)	1 1/4" BSPP (DN32)	393	182	184	50	77	50	2.4
1 1/2" BSPT (DN40)	1 1/2" BSPP (DN40)	456	231	192	59	91	58	4.0
2" BSPT (DN50)	2" BSPP (DN50)	509	258	191	69	119	69	5.6
2 1/2" BSPT (DN65)	2 1/2" BSPP (DN65)	538	314	191	78	107	74	11.1

Dimensional Drawing

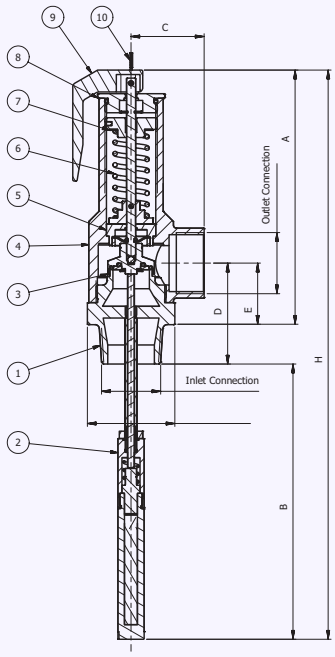

Please Note:
The above DN sizes are correctly related to the inlet & outlet connections mentioned. Please be aware other manufacturers may not correctly match DN sizes listed to the connection sizes of their valves.
Thus, when comparing a Seetru P&T relief valve to a valve from a different manufacturer, please always compare kW rating and threaded connection size, not the DN size.

Discharge Capacities

The discharge capacity of the relief valve must be equal to or greater than the output of the boiler it is intended to protect. Below are the discharge capacities for both the temperature relief and the conventional pressure relief.

The temperature rating should be used to size and select the valve.

Temperature Rating, Hot Water

Relief Pressure		DN15 (1/2" inlet)		DN20 (3/4" inlet)		DN25 (1" inlet)		DN32 (1 1/4" inlet)		DN40 (1 1/2" inlet)		DN50 (2" inlet)		DN65 (2 1/2" inlet)	
bar	psi	kW	Btu/sec	kW	Btu/sec	kW	Btu/sec	kW	Btu/sec	kW	Btu/sec	kW	Btu/sec	kW	Btu/sec
Nominal Power Rating kW per BS EN 1490															
1	14.5	10.0	9.5	25.0	23.7	50.0	47.4	75.0	71.1	100.0	94.8	-	-	-	-
Actual Power Rating kW per BS EN 4126-1 Annex NA															
1	14.5	38.1	36.1	49.2	46.6	87.4	82.8	136.5	129.4	223.7	212.0	349.5	331.3	546.2	517.7

Pressure Relief Rate, Hot Water

kW Relief Rate per BS EN 1490 & 4126-1 Annex NA

Set Pressure		DN15 (1/2" inlet)		DN20 (3/4" inlet)		DN25 (1" inlet)		DN32 (1 1/4" inlet)		DN40 (1 1/2" inlet)		DN50 (2" inlet)		DN65 (2 1/2" inlet)	
bar	psi	kW	Btu/sec	kW	Btu/sec	kW	Btu/sec	kW	Btu/sec	kW	Btu/sec	kW	Btu/sec	kW	Btu/sec
0.4	5.8	38.1	36.1	49.2	46.6	87.4	82.8	136.5	129.4	223.7	212.0	349.5	331.3	546.2	517.7
1	14.5	49.4	46.8	63.8	60.5	113.4	107.5	177.2	168.0	290.4	275.2	453.7	430.1	708.9	672.0
1.5	21.75	58.9	55.8	76.0	72.0	135.1	128.1	211.2	200.1	346.0	327.9	540.5	512.3	844.6	800.5
2	29	68.3	64.8	88.2	83.6	156.8	148.7	245.1	232.3	401.5	380.6	627.4	594.6	980.3	929.1
2.5	36.25	77.8	73.7	100.4	95.2	178.5	169.2	279.0	264.4	457.1	433.2	714.2	676.9	1115.9	1057.7
3	43.5	87.2	82.7	112.6	106.8	200.3	189.8	312.9	296.6	512.6	485.9	801.0	759.2	1251.6	1186.3
3.5	50.75	98.6	93.4	127.3	120.7	226.3	214.5	353.6	335.1	579.3	549.1	905.2	858.0	1414.4	1340.6
4	58	102.4	97.0	141.9	134.5	252.3	239.2	394.3	373.7	646.0	612.3	1009.4	956.7	1577.2	1494.9
4.5	65.25	121.3	114.9	156.6	148.4	278.4	263.9	435.0	412.3	712.7	675.5	1113.6	1055.5	1739.9	1649.2
5	72.5	132.6	125.7	171.2	162.3	304.4	288.6	475.7	450.9	779.4	738.7	1217.8	1154.2	1902.7	1803.4
6	87	155.3	147.2	200.5	190.1	356.5	337.9	557.1	528.0	912.7	865.1	1426.1	1351.7	2228.3	2112.0
7	101.5	178.0	168.7	229.9	217.9	408.6	387.3	638.5	605.2	1046.1	991.5	1634.5	1549.2	2553.9	2420.6
8	116	200.7	190.2	259.2	245.6	460.7	436.7	719.9	682.3	1179.4	1117.9	1842.9	1746.7	2879.5	2729.2
9	130.5	223.4	211.7	288.5	273.4	512.8	486.0	801.3	759.5	1312.8	1244.3	2051.2	1944.2	3205.1	3037.8
10	145	246.1	233.2	317.8	301.2	564.9	535.4	882.7	836.6	1446.1	1370.7	2259.6	2141.7	3530.6	3346.4
11	159.5	268.8	254.7	347.1	328.9	617.0	584.8	964.1	913.7	1579.5	1497.1	2468.0	2339.2	3856.2	3655.0
12	174	291.5	276.2	376.4	356.7	669.1	634.2	1045.4	990.9	1712.9	1623.5	2676.3	2536.7	4181.8	3963.6
12.5	181.25	302.8	287.0	391.0	370.6	695.1	658.9	1086.1	1029.5	1779.5	1686.7	2780.5	2635.4	4344.6	4117.9

Enclosed Discharge Safety Relief Valves

Seetru Limited

for compressed Air & Gas | *hydrogen*

Type 636 / 631 656 / 651

Safety valves with bronze body <
Enclosed discharge valve with threaded connections <

Example Applications

- Air / gas compressors
- Pressure vessels
- Pneumatic systems
- Medical gases
- Technical gases

Specifications

- Inlet connections: 3/8” to 2” (depending on bore size)
- Temperature:-40°C to +200°C (depending on seal material)
- Pressure range: 0.32 to 55.2 bar (depending on bore size)

Approvals

- Designed in accordance with BS EN ISO-4126-1 &-7
- PED 2014/68/EU (CE)
- PE(S)R UK SI 2016 No. 1105 (UKCA)
- ASME BPVC VIII.1 & XIII (UV)
- CRN

Materials of Construction

Component	Material	Grade
Inlet	Brass (636 / 631)	CW614N
	Stainless Steel (656 / 651)	1.4401 (316)
Body	Bronze	CC491K SB-62 C83600
Wetted Parts	Brass (636 / 631)	CW614N
	Stainless Steel (656 / 651)	1.4401 (316)
Spring	Stainless Steel	1.4310 (302)

Seal Materials

Seal Material	Temperature Range
Viton® (FKM)	-15°C to +200°C
Nitrile (NBR)	-40°C to +120°C

Standard seal materials shown, others are available.

Easing Gear / Lifting Gear Options

- **Standard option**:
Rota-lift, twist type
(not gas tight)

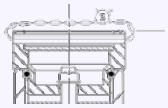

- **Other Options:**

Sealed Cap (gas tight cap)

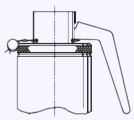

Unsealed lever (not gas tight)

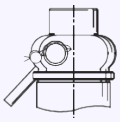

Sealed lever (gas tight)

Technical information by bore size

Bore size	9.5/10mm			13.7mm			17mm			20mm			25mm		
Inlet Size	3/8"	1/2"	3/4"	1/2"	3/4"	1"	1"	1 1/4"	1 1/2"	1"	1 1/4"	1 1/2"	1 1/4"	1 1/2"	2"
Outlet Size	3/4"			1"			1 1/2"			2"			2"		
Flow Area	70.9mm² (above 1.55 bar)			147.7mm²			227mm²			314mm²			490.4mm²		
H - Height (Rota-lift cap version)	102mm (up to 33 bar) 116mm (33-55.2 bar)			143mm (up to 35 bar) 172.5mm (35-49 bar)			204mm			227mm			252mm		
TÜV alloted outflow coefficient	0.77 above 1.55 bar			0.77			0.77			0.77			0.77		
NB Certified rated slope (ASME)	1.74 scfm/psia			3.47 scfm/psia			5.60 scfm/psia			7.77 scfm/psia			12.26 scfm/psia		
Weight (approximate) Kg	0.8			1.1			3.6			4.0			5.1		
Set Pressure range - PED (CE) bar	0.48 to 55.2			0.32 to 49.0			1.0 to 35.0			3.0 to 35.0			5.65 to 30.0		
Set Pressure range - ASME (UV) psi	22.5 to 800.4			20.3 to 710.5			34.8 to 507.5			43.5 to 507.5			82.0 to 435.0		
Relieving pressure/fully open pressure	**Set Pressure +10%**														
Reseating pressure	**Set Pressure -10%** (0.3 bar minimum)														

Maximum permissible built up back pressure = 10% of set pressure at or below which flow is not reduced.
Stable operation on flows down to 50% of valve rated capacity.

Standard Thread Connection Types

- BSP Parallel male thread
- BSP Taper male thread
- NPT male thread

Standard Outlet Connection Types

- BSP Parallel female thread
- NPT female thread

Valves with Rota-lift Easing Gear

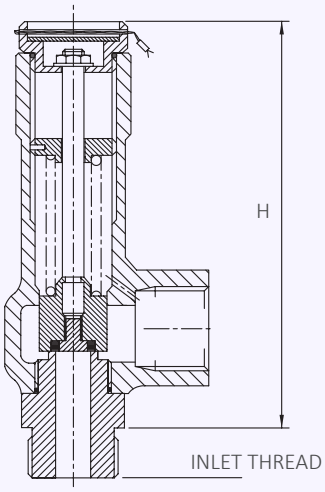

Valve Selection Guide

Approval Required	Valve type	Select Bore	Inlet Size	Thread Type	Outlet Thread Type	Easing Gear	Seal Material
PED (CE)	636 (Brass inlet)	Select bore size from above table	Select inlet size from above table	Select Inlet thread type	Select Outlet thread type	Select easing gear/top fitting	Viton® (FKM)
	656 (St. Steel inlet						Nitrile (NRB)
PED (CE), ASME (UV) & CR	631 (Brass inlet)						
	651 (St. Steel inlet						Other

EAC marking available upon request
***Please send your selected details to Seetru and we can provide the full ordering code, price and lead-time.**

Example of Valve Selection Process

Example Selection	CE/PED	636	20	1 1/2"	BSP Taper	BSP parallel	Rota-lift	Viton	10.5 bar
	Approval	Valve Type	Bore = 20mm	Inlet Size	Inlet Thread Type	Outlet Thread Type	Easing Gear	Seal	Set Pressure

Capacity Table - In accordance with TÜV, AIR at 0°C and 1013mbar. Normal m³/hour
Type 636/656: Flow rates at 10% above the set pressure

Set Pressure		Bore Size (D0)				
		9.5mm	13.7mm	17mm	20mm	25mm
bar	psi	Nm³/Hour	Nm³/Hour	Nm³/Hour	Nm³/Hour	Nm³/Hour
0.32	4.64		123.9			
0.48	6.96	51.5	138.2			
1	14.5	79.1	178.9	251.6		
2	29	119.4	248.4	385.5		
3	43.5	160.4	333.5	513.5	710.7	
4	58	201.2	418.5	644.4	891.9	
5	72.5	242.1	503.6	775.4	1073.2	
5.65	81.93	268.7	558.8	860.5	1191.0	1860.9
6	87	283.0	588.6	906.3	1254.5	1960.1
7	101.5	323.9	673.6	1037.3	1435.7	2243.3
8	116	364.8	758.7	1168.2	1616.9	2526.5
9	130.5	405.7	843.7	1299.2	1798.2	2809.7
10	145	446.6	928.8	1430.2	1979.4	3092.9
15	217.5	651.1	1354.0	2084.9	2885.7	4508.9
20	290	855.6	1779.3	2739.7	3791.9	5924.9
25	362.5	1060.0	2204.5	3394.4	4698.2	7340.9
30	435	1264.5	2629.7	4049.2	5604.4	8756.9
35	507.5	1468.9	3054.9	4703.9	6510.7	
40	580	1673.4	3480.2			
45	652.5	1877.9	3905.4			
49	710.5	2041.5	4245.6			
50	725	2082.4				
55.2	800.4	2295.0				

For any intermediate pressures/flows please contact Seetru

Capacity Table - In accordance with ASME BPVC.XIII, AIR at 60°F and 14.7 psia/scfm. SCFM
Type 631/651: Flow rates at 10% above the set pressure

Set Pressure		Bore Size (D0)				
		9.5mm	13.7mm	17mm	20mm	25mm
psi	bar	SCFM	SCFM	SCFM	SCFM	SCFM
20.3	1.40		131.9			
22.5	2.50	68.7	139.4			
30	2.07	81.5	165.5			
34.8	2.80	90.6	183.8	296.7		
40	2.76	100.4	203.7	328.7		
43.5	3.00	106.9	217.0	350.2	486.0	
50	3.45	119.2	241.8	390.3	541.5	
82	5.66	179.3	363.9	587.3	814.9	1285.8
100	6.90	213.2	432.6	698.1	968.7	1528.4
150	10.34	307.2	623.4	1006.1	1395.9	2202.6
200	13.79	401.2	814.2	1314.0	1823.2	2876.8
250	17.24	495.3	1005.0	1621.9	2250.4	3550.8
300	20.69	589.3	1195.8	1929.8	2677.6	4224.9
350	24.14	683.3	1386.6	2237.8	3104.9	4899.1
400	27.59	777.4	1577.4	2545.7	3532.2	5573.3
435	30.00	843.2	1711.0	2761.2	3831.2	6045.2
450	31.03	871.4	1768.2	2853.6	3959.3	
500	34.48	965.4	1959.0	3161.5	4386.6	
507.5	35.00	979.5	1987.6	3207.7	4450.7	
550	37.93	1059.4	2149.8			
600	41.38	1153.4	2340.6			
650	44.83	1247.5	2531.4			
700	48.28	1341.5	2722.2			
710.5	49.00	1361.3	2762.3			
750	51.72	1435.5				
800.4	55.20	1530.3				

For any intermediate pressures/flows please contact Seetru

Enclosed Discharge Safety Relief Valves

for compressed Air & Gas | *hydrogen*

Seetru Limited

Type 646 / 641

Safety valves with Stainless Steel body <
Enclosed discharge valve with threaded connections <

Example Applications

- Air / gas compressors
- Pressure vessels
- Pneumatic systems
- Medical gases
- Technical gases

Specifications

- Inlet connections: 3/8” to 2” (depending on bore size)
- Temperature:-40°C to +200°C (depending on seal material)
- Pressure range: 0.32 to 55.2 bar (depending on bore size)

Approvals

- Designed in accordance with BS EN ISO-4126-1 &-7
- PED 2014/68/EU (CE)
- PE(S)R UK SI 2016 No. 1105 (UKCA)
- ASME BPVC VIII.1 & XIII (UV)
- CRN

Materials of Construction

Component	Material	Grade
Inlet	Stainless Steel	1.4401 (316)
Body	Stainless Steel	1.4408 (316)
Internal Parts	Stainless Steel	1.4401 (316)
Spring	Stainless Steel	1.4310 (302)

Seal Materials

Seal Material	Temperature Range
Viton® (FKM)	-15°C to +200°C
Nitrile (NBR)	-40°C to +120°C

Standard seal materials shown, others are available.

Easing Gear / Lifting Gear Options

- **Standard option**: Rota-lift cap, twist type (not gas tight)

- Other Options:

Sealed Cap (gas tight cap)

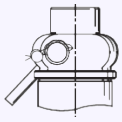

Sealed lever (gas tight)

Technical information by bore size

Bore size	9.5/10mm			13.7mm			17mm			20mm			25mm		
Inlet Size	3/8"	1/2"	3/4"	1/2"	3/4"	1"	1"	1 1/4"	1 1/2"	1"	1 1/4"	1 1/2"	1 1/4"	1 1/2"	2"
Outlet Size	3/4"			1"			1 1/2"			2"			2"		
Flow Area	70.9mm² (above 1.55 bar)			147.7mm²			227mm²			314mm²			490.4mm²		
H - Height (Rota-lift cap version)	116mm			143mm (up to 35 bar) 172.5mm (35-49 bar)			211mm			227mm			252mm		
TÜV alloted outflow coefficient	0.77 above 1.55 bar			0.77			0.77			0.77			0.77		
NB Certified rated slope (ASME)	1.74 scfm/psia			3.47 scfm/psia			5.60 scfm/psia			7.77 scfm/psia			12.26 scfm/psia		
Weight (approximate) Kg	0.8			1.1			3.6			4.0			5.1		
Set Pressure range - PED (CE) bar	0.48 to 55.2			0.32 to 49.0			1.0 to 35.0			3.0 to 35.0			5.65 to 30.0		
Set Pressure range - ASME (UV) psi	22.5 to 800.4			20.3 to 710.5			34.8 to 507.5			43.5 to 507.5			82.0 to 435.0		
Relieving pressure/fully open pressure	**Set Pressure +10%**														
Reseating pressure	**Set Pressure -10%**														

Maximum permissible built up back pressure = 10% of set pressure at or below which flow is not reduced.
Stable operation on flows down to 50% of valve rated capacity.

Standard Thread Connection Types

- BSP Parallel male thread
- BSP Taper male thread
- NPT male thread

Standard Outlet Connection Types

- BSP Parallel female thread
- NPT female thread

Valves with Rota-lift Easing Gear

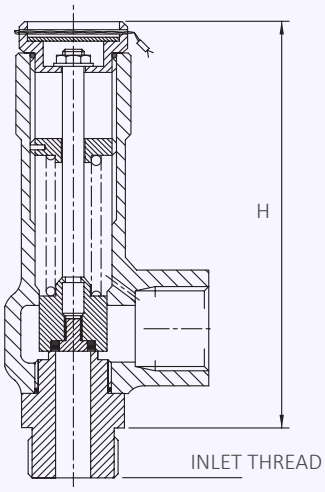

Valve Selection Guide

Approval Required	Valve type	Select Bore	Inlet Size	Inlet Thread Type	Outlet Thread Type	Easing Gear	Seal Material
PED (CE)	646	Select bore size from above table	Select inlet size from above table	Select Inlet thread type	Select Outlet thread type	Select easing gear/top fitting	Viton® (FKM)
PED (CE), ASME (UV) & CRN	641						Nitrile (NRB)
							Other

EAC marking available upon request
***Please send your selected details to Seetru and we can provide the full ordering code, price and lead-time.**

Example of Valve Selection Process

Example Selection	PED, ASME & CRN	641	20	1 1/2"	BSP Taper	BSP parallel	Rota-lift	Viton	10.5 bar
	Approval	Valve Type	Bore = 20mm	Inlet Size	Inlet Thread Type	Outlet Thread Type	Easing Gear	Seal	Set Pressure

Capacity Table - In accordance with TÜV, AIR at 0°C and 1013mbar. Normal m³/hour
Type 646: Flow rates at 10% above the set pressure

Set Pressure		Bore Size (D0)				
		9.5mm	13.7mm	17mm	20mm	25mm
bar	psi	Nm³/Hour	Nm³/Hour	Nm³/Hour	Nm³/Hour	Nm³/Hour
0.32	4.64		123.9			
0.48	6.96	51.5	138.2			
1	14.5	79.1	178.9	251.6		
2	29	119.4	248.4	385.5		
3	43.5	160.4	333.5	513.5	710.7	
4	58	201.2	418.5	644.4	891.9	
5	72.5	242.1	503.6	775.4	1073.2	
5.65	81.93	268.7	558.8	860.5	1191.0	1860.9
6	87	283.0	588.6	906.3	1254.5	1960.1
7	101.5	323.9	673.6	1037.3	1435.7	2243.3
8	116	364.8	758.7	1168.2	1616.9	2526.5
9	130.5	405.7	843.7	1299.2	1798.2	2809.7
10	145	446.6	928.8	1430.2	1979.4	3092.9
15	217.5	651.1	1354.0	2084.9	2885.7	4508.9
20	290	855.6	1779.3	2739.7	3791.9	5924.9
25	362.5	1060.0	2204.5	3394.4	4698.2	7340.9
30	435	1264.5	2629.7	4049.2	5604.4	8756.9
35	507.5	1468.9	3054.9	4703.9	6510.7	
40	580	1673.4	3480.2			
45	652.5	1877.9	3905.4			
49	710.5	2041.5	4245.6			
50	725	2082.4				
55.2	800.4	2295.0				

For any intermediate pressures/flows please contact Seetru

Capacity Table - In accordance with ASME BPVC.XIII, AIR at 60°F and 14.7 psia/scfm. SCFM
Type 641: Flow rates at 10% above the set pressure

Set Pressure		Bore Size (D0)				
		9.5mm	13.7mm	17mm	20mm	25mm
psi	bar	SCFM	SCFM	SCFM	SCFM	SCFM
20.3	1.40		131.9			
22.5	2.50	68.7	139.4			
30	2.07	81.5	165.5			
34.8	2.80	90.6	183.8	296.7		
40	2.76	100.4	203.7	328.7		
43.5	3.00	106.9	217.0	350.2	486.0	
50	3.45	119.2	241.8	390.3	541.5	
82	5.66	179.3	363.9	587.3	814.9	1285.8
100	6.90	213.2	432.6	698.1	968.7	1528.4
150	10.34	307.2	623.4	1006.1	1395.9	2202.6
200	13.79	401.2	814.2	1314.0	1823.2	2876.8
250	17.24	495.3	1005.0	1621.9	2250.4	3550.8
300	20.69	589.3	1195.8	1929.8	2677.6	4224.9
350	24.14	683.3	1386.6	2237.8	3104.9	4899.1
400	27.59	777.4	1577.4	2545.7	3532.2	5573.3
435	30.00	843.2	1711.0	2761.2	3831.2	6045.2
450	31.03	871.4	1768.2	2853.6	3959.3	
500	34.48	965.4	1959.0	3161.5	4386.6	
507.5	35.00	979.5	1987.6	3207.7	4450.7	
550	37.93	1059.4	2149.8			
600	41.38	1153.4	2340.6			
650	44.83	1247.5	2531.4			
700	48.28	1341.5	2722.2			
710.5	49.00	1361.3	2762.3			
750	51.72	1435.5				
800.4	55.20	1530.3				

For any intermediate pressures/flows please contact Seetru

Atmospheric Discharge Safety Relief Valves

Compressed Air & Gas | Steam

Seetru Limited

Type 63608

Safety valves with brass body and plastic outlet <
Enclosed discharge valve with threaded connections <

Example Applications

- Air / gas compressors
- Pressure vessels
- Pneumatic systems
- Medical gases (non-flammable)
- Technical gases (non-flammable)

Specifications

- Inlet connections: 1/4” to 1/2”
- Temperature:-40°C to +200°C (depending on seal material)
- Pressure range: 0.3 to 13.2 bar

Approvals

- Designed in accordance with BS EN ISO-4126-1 &-7
- PED 2014/68/EU (CE)
- PE(S)R UK SI 2016 No. 1105 (UKCA)

Materials of Construction

Component	Material	Grade
Inlet Body	Brass	CW602N
Outlet Body	PPS Plastic	40% glass filled
Internal parts	Brass	CW602N
Spring	Stainless Steel	1.4310 (302)

Seal Materials

Seal Material	Temperature Range
Viton® (FKM)	-15°C to +200°C
Nitrile (NBR)	-40°C to +120°C

Standard seal materials shown, others are available.

Easing Gear / Lifting Gear Options

- Standard option – Rota-lift cap, twist type

Technical information by bore size

Bore size	7.9mm (63608)		
Inlet Size	1/4"	3/8"	1/2"
Outlet Size	3/8"		
Flow Area	49.02mm²		
H - Height (Rota-lift cap version)	57mm		
TÜV alloted outflow coefficient	0.68		
Weight (approximate) Kg	0.5		
Set Pressure range - PED (CE) bar	0.3 to 13.2		
Relieving pressure/fully open pressure	Set pressure +10% (Below 1 bar = 0.1 bar)		
Reseating pressure	Set pressure-10% (0.3 bar minimum)		

Maximum permissible built up back pressure = 10% of set pressure at or below which flow is not reduced.
Stable operation on flows down to 50% of valve rated capacity.

Standard Thread Connection Types

- BSP Parallel male thread
- BSP Taper male thread
- NPT male thread

Standard OUTLET Thread Connection Types

- BSP Parallel female thread

Valve Drawing

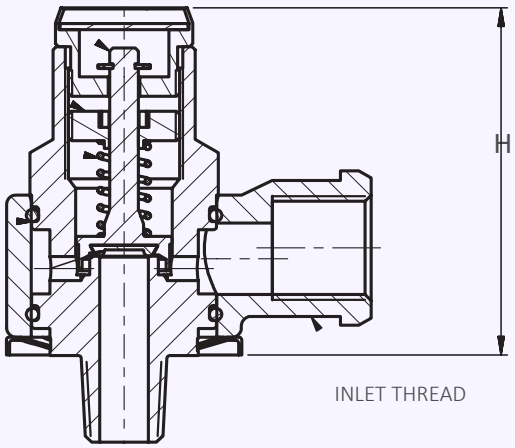

Valve Selection Guide

Approval Required	Valve type	Inlet Size	Inlet Thread Type	Outlet Thread Type	Easing Gear	Seal Material
PED (CE)	63608	Select inlet size from above table	Select Inlet thread type	Select Outlet thread type	Select easing gear/top fitting	Viton® (FKM)
						Nitrile (NBR)
						Other

EAC marking available upon request
***Please send your selected details to Seetru and we can provide the full ordering code, price and lead-time.**

Example of Valve Selection Process

Example Selection	CE/PED	63608	1/2"	BSP Taper	BSP parallel	Rota-lift	Viton	10.5 bar
	Approval	Valve Type	Inlet Size	Inlet Thread Type	Outlet Thread Type	Easing Gear	Seal	Set Pressure

Capacity Table - In accordance with TÜV, AIR at 0°C and 1013mbar. Normal m³/hour

Type 63608: Flow rates at 10% above the set pressure

Set Pressure		Bore Size (D0)				
		7.9mm				
bar	psi	Nm³/Hour				
0.3	4.35	29.4				
0.8	11.6	43.4				
1.4	20.3	57.9				
2	29	72.9				
3	43.5	97.9				
4	58	122.9				
5	72.50	147.9				
6	87	172.9				
7	101.5	197.3				
8	116	222.8				
9	130.5	247.7				
10	145	272.7				
13.2	191.4	352.7				

For any intermediate pressures/flows please contact Seetru

Enclosed Discharge Safety Relief Valves

for compressed air or gases

Seetru Limited

Type 86810

Safety valves with brass body and plastic outlet <
Enclosed discharge valve with threaded connections <

Example Applications

- Air / gas compressors (non-flammable)
- Pressure vessels
- Pneumatic systems
- Medical gases (non-flammable)
- Technical gases (non-flammable)

Specifications

- Inlet connections: 1/2” to 3/4”
- Temperature:-15°C to +200°C
- Available Set Pressures: 7.0, 8.0, 9.3, 10.0, 10.5, 11.0, 11.5, 14.5 & 16.0 bar

Approvals

- Designed in accordance with BS EN ISO-4126-1 &-7
- PED 2014/68/EU (CE)
- PE(S)R UK SI 2016 No. 1105 (UKCA)

Materials of Construction

Component	Material	Grade
Inlet Body	Brass	CZ121
Outlet Body	PPS Plastic	40% glass filled
Internal parts	Brass	CZ121
Spring	Stainless Steel	1.4310 (302)

Seal Materials

Seal Material	Temperature Range
Viton® (FKM)	-15°C to +200°C

Standard seal materials shown, others are available.

Easing Gear / Lifting Gear Options

- **Standard option –** Rota-lift cap, twist type (not gas tight)

Technical information by bore size

Bore size	10.0mm (86810)	
Inlet Size	1/2"	3/4"
Outlet Size	3/4"	
Flow Area	78.5mm²	
H - Height (Rota-lift cap version)	84mm	
TÜV alloted outflow coefficient	0.78	
Weight (approximate) Kg	0.5	
Available Set Pressures, bar	7.0, 8.0, 9.3, 10.0, 10.5, 11.0, 11.5, 14.5 & 16.0	
Relieving pressure/fully open pressure	**Set pressure +10%**	
Reseating pressure	**Set pressure -10%**	

Maximum permissible built up back pressure = 10% of set pressure at or below which flow is not reduced.

Standard Thread Connection Types

- BSP Parallel male thread
- BSP Taper male thread
- NPT male thread

Standard OUTLET Thread Connection Types

- BSP Parallel female thread

Valves Drawing

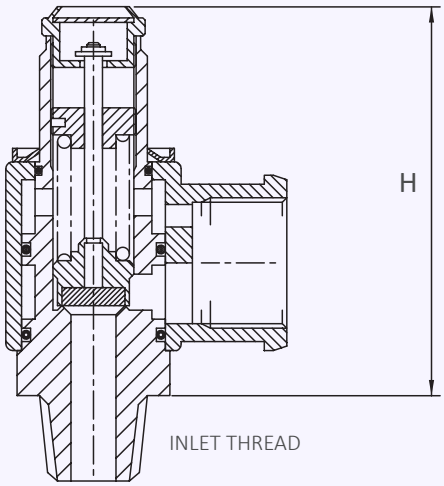

Valve Selection Guide

Approval Required	Valve type	Inlet Size	Inlet Thread Type	Outlet Thread Type	Easing Gear	Seal Material
PED (CE)	86810	Select inlet size from above table	Select Inlet thread type	Select Outlet thread type	Select easing gear/top fitting	Viton® (FKM)
						Other

EAC marking available upon request

***Please send your selected details to Seetru and we can provide the full ordering code, price and lead-time.**

Example of Valve Selection Process

Example Selection	CE/PED	86810	1/2"	BSP Taper	BSP parallel	Rota-lift	Viton	10.5 bar
	Approval	Valve Type	Inlet Size	Inlet Thread Type	Outlet Thread Type	Easing Gear	Seal	Set Pressure

Capacity Table - In accordance with TÜV, AIR at 0°C and 1013mbar. Normal m³/hour

Type 86810: Flow rates at 10% above the set pressure

Set Pressure		Bore Size (D0)				
		10				
bar	psi	Nm³/Hour				
7	101.5	363				
8	116	409				
9.3	134.85	468				
10	145	500				
10.5	152.25	524				
11	159.5	547				
11.5	166.75	570				
14.5	210.25	707				
16	232	776				

CRYOGENICS & LIQUEFIED GASES

Cryogenic Solutions

Your safety valve partner for cryogenic and liquefied gas

The Seetru range of safety valves for cryogenic & liquefied gas applications is built using Seetru sealing technology, suitable for temperatures down to-196°C, and pressures up to 1100 bar. Available with PTFE, PPS, or metal-to-metal sealing.

SEETRU

- **Pressure vessels/receivers, pressure equipment, and piping**
- **Cryogenics including oxygen and special gases**
- **Medical gas equipment**
- **Cryogenic compressor applications**
- **Container lorries, cryogenic trailers, LPG/LNG terminals, carriers, etc.**
- **Industrial freezing**
- **Fire fighting equipment**

www.seetru.com/cryogenic-and-liquefied-gas

www.seetru.com | info@seetru.com | +44 (0) 117 930 6100

Enclosed Discharge Safety Relief Valves

for compressed air or gases | *cryogenic & liquefied gas* | *refrigeration*

Seetru Limited

Type 346 / 356

Safety valves with either Bronze or Stainless Steel body <
Enclosed discharge valve with threaded connections <

Example Applications

- Air/Gas systems
- Pressure vessels
- Medical gases
- Technical Gases
- CO2 refrigeration
- Ammonia refrigeration (34610)
- Cryogenic applications
- Liquefied gases

Specifications

- Inlet connections: 3/8” to 3/4”
- Temperature range:-196°C to +50°C
- Pressure range: 0.83 to 30.76 bar

Approvals

- Designed in accordance with BS EN ISO-4126-1 &-7
- PED 2014/68/EU (CE)
- PE(S)R UK SI 2016 No. 1105 (UKCA)
- Materials meet the requirements of BAM for oxygen service.

Materials of Construction

Component	Material	Grade
Inlet	Stainless Steel	1.4401 (316)
Body	356 Valve = Bronze	C83600
	346 Valve = Stainless Steel	1.4408 (316)
Internal Parts	356 Valve = Brass	BS2874 CZ121
	346 Valve = Stainless Steel	1.4401 (316)
Spring	Stainless Steel	1.4310 (302)

Seal Materials

Seal Material	Temperature Range
PTFE	-196°C to +50°C

Standard seal materials shown, others are available.

Top Fitting Options

- Standard Option
Sealed Cap (gas tight cap)

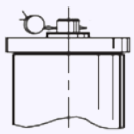

- Other options:
Sealed lever (gas tight)

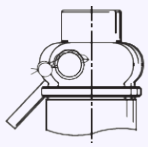

Technical information by bore size

Bore size	9.5mm (34610)			9.5mm (35610)		
Inlet Size	3/8"	1/2"	3/4"	3/8"	1/2"	3/4"
Outlet Size	3/4"			3/4"		
Flow Area	70.9mm²			70.9mm²		
H - Height (Rota-lift cap version)	113mm			99mm		
TÜV alloted outflow coefficient	0.77 above 1.55 bar (contact Seetru for below 1.55 bar)			0.77 above 1.55 bar (contact Seetru for below 1.55 bar)		
Weight (approximate) Kg	0.7 (3.0 to 30.76 bar)			0.7 (3.0 to 30.76 bar)		
Set Pressure range - PED (CE) bar	0.8			0.8		
Relieving pressure/fully open pressure	**Set pressure +10%**					
Reseating pressure	**Set pressure -10%**					

Maximum permissible built up back pressure = 10% of set pressure at or below which flow is not reduced. Stable operation on flows down to 50% of valve rated capacity.

Valve drawing

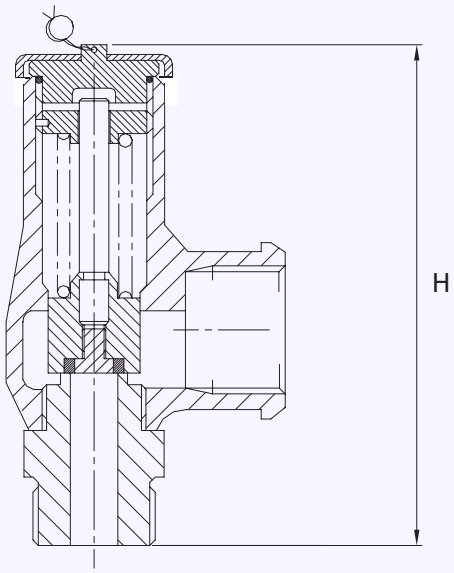

Standard Thread Connection Types

- BSP Parallel male thread
- BSP Taper male thread
- NPT male thread

Standard Outlet Connection Types

- BSP Parallel female thread
- NPT female thread

Valve Selection Guide

Body Material	Valve Type	Select Bore	Inlet Size	Inlet Thread Type	Outlet Thread Type	Easing Gear	Seal Material
Stainless Steel	**346**	9.5mm	Select inlet size from above table	Select Inlet thread type	Select Outlet thread type	Sealed cap	PTFE
Bronze	**356**						

EAC marking available upon request

***Please send your selected details to Seetru and we can provide the full ordering code, price and lead-time.**

Example of Valve Selection Process

Example Selection	Bronze	356	9.5	1/2"	NPT	NPT	Sealed Cap	PTFE	23.5 bar
	Body Material	Valve Type	Bore = 9.5mm	Inlet Size	Inlet Thread Type	Outlet Thread Type	Top Fitting	Seal	Set Pressure

Capacity Table - In accordance with TÜV, AIR at 0°C and 1013mbar. Normal m³/hour

Type 346/356: Flow rates at 10% above the set pressure

Set Pressure		Bore Size (D0)				
		9.5mm				
bar	psi	Nm³/Hour				
0.83	12.04	63.8				
1.0	14.50	71.4				
2.0	29.00	119.4				
3.0	43.50	160.3				
4.0	58.00	201.3				
5.0	72.50	242.1				
6.0	87.00	283.0				
7.0	101.50	323.9				
8.0	116.00	364.8				
9.0	130.50	405.7				
10.0	145.00	446.6				
15.0	217.50	651.1				
20.0	290.00	855.5				
25.0	362.50	1060.0				
30.0	435.00	1264.5				
30.76	446.02	1295.6				

For any intermediate pressures/flows please contact Seetru

Enclosed Discharge Safety Relief Valves

for compressed air or gases | *steam* | *cryogenics & liquefied gases* | *hydrogen*

Seetru Limited

Type 936 Threaded

Safety valves made with brass inlets<
Enclosed discharge valve with threaded connections<
Metal to metal sealing<

Example Applications

- Air / gas compressors
- Pressure vessels
- Medical gases/Technical gases
- Thermal relief
- Steam systems

Specifications

- Inlet connections: 1/2” to 2” threaded connections (depending on valve bore size) (for flanged connections see 946 Flanged datasheet).
- Temperature range: -60°C to +250°C (depending on body o’ring material)
- Pressure range: 0.3 to 28.0 bar (depending on valve bore size)

Approvals

- Designed in accordance with BS EN ISO-4126-1 &-7
- PED 2014/68/EU (CE)
- PE(S)R UK SI 2016 No. 1105 (UKCA)
- Leak tightness at 90% set pressure to API 527 and in accordance with EN ISO 4126-1
- Materials meet the requirements of BAM (Germany) for oxygen service

Materials of Construction

Component	Material	Grade
Inlet	Brass	CZ132 / CW602N
Outlet Body (10mm bore valve)	Bronze	SB-62 C8360
Outlet Body (15, 20 & 25mm bore valves)	Stainless Steel	1.4408 (316)
Spring	Stainless Steel	1.4310 (302)
Disc	Stainless Steel	S20910

Seal Materials

This valve using metal to metal sealing. There is a choice of o’ring used for the sealed cap/lever.

O'ring material	Temperature Range
Viton® (FKM)	-20°C to +250°C
Nitrile (NBR)	-20°C to +120°C
Silicone	-50°C to +200°C
PTFE	-60°C to +200°C
EPDM	-55°C to +130°C

Standard seal materials shown, others are available.

Easing Gear / Lifting Gear / Top Fitting Options

- Sealed Cap (gas tight cap)

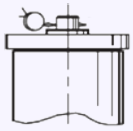

- Sealed lever (gas tight)

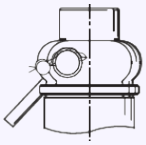

- Rota-lift (not gas tight)

- Open Lever (not gas tight)

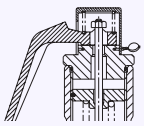

Technical information by bore size

Bore size	10mm (93610)			15mm (93615)			20mm (93620)			25mm (93625)			
Inlet Size	1/2"	3/4"	1"	1"	1 1/4"	1 1/2"	1"	1 1/4"	1 1/2"	1"	1 1/4"	1 1/2"	2"
Outlet Size	1"			1 1/2"			2"			2"			
Flow Area	78.5mm²			177mm²			314mm²			491mm²			
H - Height (Sealed Lever version)	114mm			168mm			141mm			225mm			
TÜV alloted outflow coefficient	0.85 (0.7 below 0.8 bar)			0.85 (0.7 below 0.8 bar)			0.85 (0.7 below 0.8 bar)			0.85 (0.7 below 0.8 bar)			
Weight (approximate) Kg	1.0			2.1			3.5			4.2			
Set Pressure range - PED (CE) bar	0.3 to 28.0			0.3 to 28.0			0.3 to 28.0			0.3 to 20.0			
Relieving pressure/fully open pressure	**Set pressure +10%** (0.1 bar below 1.0 bar)												
Reseating pressure	**Set pressure -10%** (0.3 bar below 3.0 bar)												

- TÜV alloted outflow coefficients for pressures above 3.0/4.0 bar, for lower pressures please see the flow rate tables or contact Seetru.
- Maximum permissible built up back pressure = 10% of set pressure at or below which flow is not reduced.
- Stable operation on flows down to 50% of valve rated capacity.
- Leak tightness at 90% set pressure to API 527 and in accordance with EN ISO 4126-1

Valve Drawing

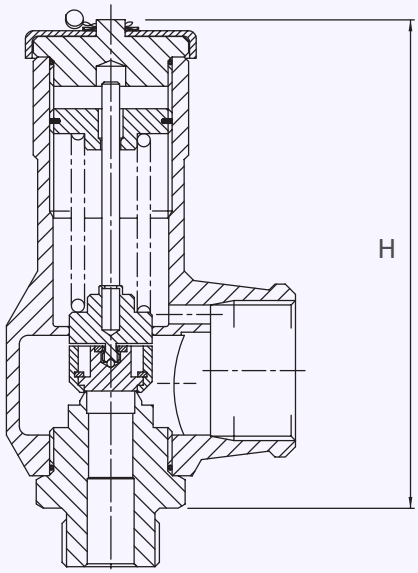

Standard INLET Connection Types

- BSP parallel male thread
- BSP taper male thread
- NPT male thread
- BSP parallel female thread (limited option)

Standard OUTLET Connection Types

- BSP parallel female thread

Valve Selection Guide

Valve type	Select Bore	Inlet Size	Inlet Thread Type	Top Fitting	O'ring material (for cap)	Set pressure
936	Select bore size from above table	Select inlet size from above table	Select Inlet Thread type	Select easing gear/top fitting	See table	Set pressure from available range

EAC marking available upon request

***Please send your selected details to Seetru and we can provide the full ordering code, price and lead-time.**

Example of Valve Selection Process

Example Selection	936	15	1"	BSP parallel	Rota Lift	Viton	17.5 bar
	Valve Type	Bore = 15mm	Inlet Size	Inlet Thread Type	Top Fitting	O'ring	Set Pressure

Capacity Table - In accordance with TÜV, AIR at 0°C and 1013mbar. Normal m³/hour
Type 936: Flow rates at 10% above the set pressure

Set Pressure		Bore Size (D0)			
		10mm	15mm	20mm	25mm
bar	psi	Nm³/Hour	Nm³/Hour	Nm³/Hour	Nm³/Hour
0.3	4.35	48.5	109.2	194.2	303.5
0.5	7.25	59.0	132.9	236.2	369.1
1	14.5	96.1	216.2	384.4	600.6
2	29	146.1	328.7	584.4	913.2
3	43.5	196.1	441.3	784.5	1225.8
4	58	246.1	553.8	948.6	1538.4
5	72.5	296.1	666.4	1184.7	1851.1
6	87.00	346.2	778.9	1384.8	2163.7
7	101.5	396.2	891.4	1584.8	2476.3
8	116	446.2	1004.0	1784.9	2788.9
9	130.5	496.2	1116.5	1985.0	3101.6
10	145	546.7	1229.1	2185.1	3414.2
15	217.5	796.3	1791.8	3185.5	4977.3
20	290	1046.4	2354.6	4185.9	6540.4
25	362.5	1296.5	2917.3	5186.3	
28	406	1446.6	3254.9	5786.5	

For any intermediate pressures/flows please contact Seetru

Capacity Table - In accordance with TÜV, STEAM. Kg/hour
Type 936: Flow rates at 10% above the set pressure

Set Pressure		Bore Size (D0)			
		10mm	15mm	20mm	25mm
bar	psi	Kg/hour of Steam	Kg/hour of Steam	Kg/hour of Steam	Kg/hour of Steam
0.3	4.35	37.6	84.5	150.2	234.7
0.5	7.25	46.6	104.8	186.3	291.1
1	14.5	76.6	172.5	306.6	479.0
2	29	115.1	259.0	460.5	719.5
3	43.5	153.2	344.6	612.7	957.4
4	58	190.9	429.7	763.9	1193.7
5	72.5	228.6	514.3	914.4	1428.7
6	87.00	266.1	598.6	1064.2	1662.9
7	101.5	303.4	682.6	1213.5	1896.2
8	116	340.6	766.5	1362.6	2129.1
9	130.5	377.9	850.4	1511.8	2362.2
10	145	415.1	933.9	1660.4	2594.4
15	217.5	600.3	1350.7	2401.3	3752.0
20	290	785.4	1767.2	3141.7	4909.0
25	362.5	970.5	2183.7	3882.2	
28	406	1081.9	2434.4	4327.9	

For any intermediate pressures/flows please contact Seetru

Enclosed Discharge Safety Relief Valves

for compressed air or gases | *steam* | *cryogenics & liquefied gases* | *hydrogen*

Seetru Limited

Type 946 Threaded

Safety valves made from Stainless Steel <
Enclosed discharge valve with threaded connections <
Metal to metal sealing <

Example Applications

- Air / gas compressors
- Pressure vessels
- Medical gases/Technical gases
- Refrigeration (including ammonia)
- Thermal relief
- Steam systems
- Hydrogen

Specifications

- Inlet connections: 1/2” to 2” threaded connections (depending on valve bore size) *For flanged connections see datasheet 946 Flanged
- Temperature range: -196°C to +250°C (depending on body o’ring material)
- Pressure range: 0.3 to 28.0 bar (depending on valve bore size)

Approvals

- Designed in accordance with BS EN ISO-4126-1 &-7
- PED 2014/68/EU (CE)
- PE(S)R UK SI 2016 No. 1105 (UKCA)
- Leak tightness at 90% set pressure to API 527 and in accordance with EN ISO 4126-1

Materials of Construction

Component	Material	Grade
Inlet	Stainless Steel	1.4401 (316)
Body	Stainless Steel	1.4408 (316)
Internal Parts	Stainless Steel	1.4401 (316)
Spring	Stainless Steel	1.4310 (302)
Disc	Stainless Steel	S20910

Seal Materials

This valve using metal to metal sealing. There is a choice of o’ring used for the sealed cap/lever.

O’ring material – Top cap	Temperature Range
Viton® (FKM)	-20°C to +200°C
Nitrile (NBR)	-20°C to +120°C
Silicone	-50°C to +200°C
EPDM	-55°C to +130°C
PTFE	-196°C to +200°C

Standard seal materials shown, others are available.

Easing Gear / Lifting Gear / Top Fitting Options

- Sealed Cap (gas tight cap)

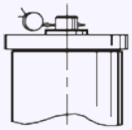

- Sealed lever (gas tight)

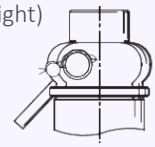

- Rota-lift (not gas tight)

Technical information by bore size

Bore size	10mm (94610)			15mm (94615)			20mm (94620)			25mm (94625)			
Inlet Size	1/2"	3/4"	1"	1"	1 1/4"	1 1/2"	1"	1 1/4"	1 1/2"	1"	1 1/4"	1 1/2"	2"
Outlet Size	1"			1 1/2"			2"			2"			
Flow Area	78.5mm²			177mm²			314mm²			491mm²			
H - Height (Sealed Lever version)	114mm			168mm			141mm			225mm			
TÜV alloted outflow coefficient	0.85 (0.7 below 0.8 bar)			0.85 (0.7 below 0.8 bar)			0.85 (0.7 below 0.8 bar)			0.85 (0.7 below 0.8 bar)			
Weight (approximate) Kg	1.0			2.1			3.5			4.2			
Set Pressure range - PED (CE) bar	0.3 to 28.0			0.3 to 28.0			0.3 to 28.0			0.3 to 20.0			
Relieving pressure/fully open pressure	**Set pressure +10%** (0.1 bar below 1.0 bar)												
Reseating pressure	**Set pressure -10%** (0.3 bar below 3.0 bar)												

- TÜV alloted outflow coefficients for pressures above 3.0/4.0 bar, for lower pressures please see the flow rate tables or contact Seetru.
- Maximum permissible built up back pressure = 10% of set pressure at or below which flow is not reduced.
- Stable operation on flows down to 50% of valve rated capacity. Leak tightness at 90% set pressure to API 527 and in accordance with EN ISO 4126-1

Valve Drawing

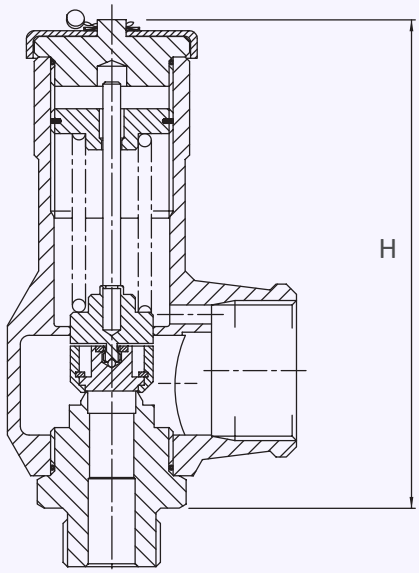

Standard INLET Connection Types

- BSP parallel male thread
- BSP taper male thread
- NPT male thread
- BSP parallel female thread (limited option)

Standard OUTLET Connection Types

- BSP parallel female thread

Valve Selection Guide

Valve type	Select Bore	Inlet Size	Inlet Thread Type	Top Fitting	O'ring material (for cap)	Set pressure
946	Select bore size from above table	Select inlet size from above table	Select Inlet Thread type	Select easing gear/top fitting	See table	Set pressure from available range

EAC marking available upon request

***Please send your selected details to Seetru and we can provide the full ordering code, price and lead-time.**

Example of Valve Selection Process

Example Selection	946	15	1"	BSP parallel	Sealed Lever	Viton	17.5 bar
	Valve Type	Bore = 15mm	Inlet Size	Inlet Thread Type	Top Fitting	O'ring	Set Pressure

Capacity Table - In accordance with TÜV, AIR at 0°C and 1013mbar. Normal m³/hour
Type 946: Flow rates at 10% above the set pressure

Set Pressure		Bore Size (D0)			
		10mm	15mm	20mm	25mm
bar	psi	Nm³/Hour	Nm³/Hour	Nm³/Hour	Nm³/Hour
0.3	4.35	48.5	109.2	194.2	303.5
0.5	7.25	59.0	132.9	236.2	369.1
1	14.5	96.1	216.2	384.4	600.6
2	29	146.1	328.7	584.4	913.2
3	43.5	196.1	441.3	784.5	1225.8
4	58	246.1	553.8	948.6	1538.4
5	72.5	296.1	666.4	1184.7	1851.1
6	87.00	346.2	778.9	1384.8	2163.7
7	101.5	396.2	891.4	1584.8	2476.3
8	116	446.2	1004.0	1784.9	2788.9
9	130.5	496.2	1116.5	1985.0	3101.6
10	145	546.7	1229.1	2185.1	3414.2
15	217.5	796.3	1791.8	3185.5	4977.3
20	290	1046.4	2354.6	4185.9	6540.4
25	362.5	1296.5	2917.3	5186.3	
28	406	1446.6	3254.9	5786.5	

For any intermediate pressures/flows please contact Seetru

Capacity Table - In accordance with TÜV, STEAM. Kg/hour
Type 946: Flow rates at 10% above the set pressure

Set Pressure		Bore Size (D0)			
		10mm	15mm	20mm	25mm
bar	psi	Kg/hour of Steam	Kg/hour of Steam	Kg/hour of Steam	Kg/hour of Steam
0.3	4.35	37.6	84.5	150.2	234.7
0.5	7.25	46.6	104.8	186.3	291.1
1	14.5	76.6	172.5	306.6	479.0
2	29	115.1	259.0	460.5	719.5
3	43.5	153.2	344.6	612.7	957.4
4	58	190.9	429.7	763.9	1193.7
5	72.5	228.6	514.3	914.4	1428.7
6	87.00	266.1	598.6	1064.2	1662.9
7	101.5	303.4	682.6	1213.5	1896.2
8	116	340.6	766.5	1362.6	2129.1
9	130.5	377.9	850.4	1511.8	2362.2
10	145	415.1	933.9	1660.4	2594.4
15	217.5	600.3	1350.7	2401.3	3752.0
20	290	785.4	1767.2	3141.7	4909.0
25	362.5	970.5	2183.7	3882.2	
28	406	1081.9	2434.4	4327.9	

For any intermediate pressures/flows please contact Seetru

Enclosed Discharge Safety Relief Valves

for compressed air & gas *hydrogen*

Seetru Limited

Type 33020 / 34020 / 34320

Safety valves made with a Brass or Stainless Steel body and Stainless Steel inlets <
Enclosed discharge valve with threaded connections <
Elastomer rubber sealing <

Example Applications

- Air / gas compressors
- Pressure vessels
- Pneumatic systems
- Medical gases/Technical gases
- Hydrogen (with 316 stainless steel inlet)

Specifications

- Inlet connections: 3/8" to 1/2" threaded inlet connections
- Temperature range:-40°C to +200°C
  (depending on body rubber seal material)
- Pressure range: 55.0 to 103.4 bar

Approvals

- Designed in accordance with BS EN ISO-4126-1 &-7
- PED 2014/68/EU (CE)
- PE(S)R UK SI 2016 No. 1105 (UKCA)

Materials of Construction

Component	Valve Type	Material	Grade
Inlet	33020	Stainless Steel	1.4305 (303)
	34020	Stainless Steel	1.4305 (303)
	34320	Stainless Steel	1.4401 (316)
Body	33020	Brass	CZ132
	34020	Stainless Steel	1.4408 (316)
	34320	Stainless Steel	1.4408 (316)
Spring	All	Stainless Steel	302

Drawing showing all component materials available upon request.

Seal Materials

This valve using metal to metal sealing. There is a choice of o'ring used for the sealed cap/lever.

O'ring material – Top cap	Temperature Range
Viton® (FKM)	-15°C to +200°C
Nitrile (NBR)	-40°C to +120°C

Standard seal materials shown, others are available.

Top fitting

Sealed Cap (gas tight cap)

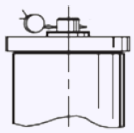

THESE VALVES SHOULD ONLY BE TESTED FOR SET PRESSURE ON LIQUID PRIOR TO FINAL INSTALLATION. VALVES THAT ARE TESTED ON AIR & FULLY LIFTED WILL CAUSE DAMAGE TO THE SEALING FACE.

Technical information by bore size

Bore size	7.14mm (33020)		7.14mm (34020)		7.14mm (34320)	
Inlet Size	3/8"	1/2"	3/8"	1/2"	3/8"	1/2"
Outlet Size	1/2"		1/2"		1/2"	
Flow Area	40.04mm²		40.04mm²		40.04mm²	
H - Height	96mm		96mm		96mm	
TÜV alloted outflow coefficient	0.67		0.67		0.67	
Weight (approximate) Kg	0.8		0.8		0.8	
Set Pressure range - PED (CE) bar	55.0 to 103.4 bar		55.0 to 103.4 bar		55.0 to 103.4 bar	
Relieving pressure/fully open pressure	**Set pressure +10%**					
Reseating pressure	**Set pressure -15%**					

Maximum permissible built up back pressure = 10% of set pressure at or below which flow is not reduced.

Standard INLET Connection Types

- BSP parallel male thread
- BSP taper male thread
- NPT male thread

Standard OUTLET Connection Types

- BSP parallel female thread
- NPT female thread

Valve Drawing

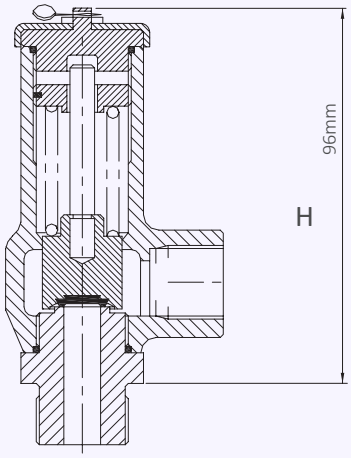

Valve Selection Guide

Valve type	Inlet Size	Inlet Thread Type	Outlet Thread Type	Seal Material	Set pressure
33020, 34020 or 34320 (see materials)	Select inlet size from above table	Select Inlet Thread type	Select Oulet Thread type	See table	Set pressure from available range

EAC marking available upon request

***Please send your selected details to Seetru and we can provide the full ordering code, price and lead-time.**

Example of Valve Selection Process

Example Selection	33020	1/2"	NPT	NPT	Viton	100 bar
	Valve Type	Inlet Size	Inlet Thread Type	Outlet Thread Type	Seal Material	Set Pressure

Capacity Table - In accordance with TÜV, AIR at 0°C and 1013mbar. Normal m³/hour

Type 33020, 34020 & 34320: Flow rates at 10% above the set pressure

Set Pressure		Bore Size (D0)				
		7.14mm				
bar	psi	Nm³/Hour				
55	797.5	1124.0				
60	870	1224.5				
65	942.5	1325.0				
70	1015	1425.5				
75	1087.5	1526.0				
80	1160	1626.5				
85	1,232.50	1727.0				
90	1305	1827.5				
95	1377.5	1928.0				
100	1450	2028.5				
103.4	1499.3	2096.9				

For any intermediate pressures/flows please contact Seetru

Enclosed Discharge Safety Relief Valves

Seetru Limited

for compressed air & gas *hydrogen*

Safety valves made with a Brass or Stainless Steel body and Stainless Steel inlets <
Enclosed discharge valve with threaded connections <
Elastomer rubber sealing <

Type 33110 / 34110 / 34410

Example Applications

- Air / gas compressors
- Pressure vessels
- Pneumatic systems
- Medical gases/Technical gases
- Hydrogen (with 316 stainless steel inlet)

Specifications

- Inlet connections: 3/8" to 1/2" threaded inlet connections
- Temperature range:-40°C to +200°C
  (depending on body rubber seal material)
- Pressure range: 27 to 36 & 48.3 to 241.3 bar

Approvals

- Designed in accordance with BS EN ISO-4126-1 &-7
- PED 2014/68/EU (CE)
- PE(S)R UK SI 2016 No. 1105 (UKCA)

Materials of Construction

Component	Valve Type	Material	Grade
Inlet	33110	Stainless Steel	303
	34110	Stainless Steel	303
	34410	Stainless Steel	316
Body	33110	Brass	CZ122
	34110	Stainless Steel	316
	34410	Stainless Steel	316
Spring	All	Stainless Steel	302

Drawing showing all component materials available upon request.

Seal Materials

This valve using metal to metal sealing. There is a choice of o'ring used for the sealed cap/lever.

O'ring material – Top cap	Temperature Range
Viton® (FKM)	-15°C to +200°C
Nitrile (NBR)	-40°C to +120°C

Standard seal materials shown, others are available.

Top fitting

Sealed Cap (gas tight cap)

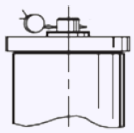

THESE VALVES SHOULD ONLY BE TESTED FOR SET PRESSURE ON LIQUID PRIOR TO FINAL INSTALLATION. VALVES THAT ARE TESTED ON AIR & FULLY LIFTED WILL CAUSE DAMAGE TO THE SEALING FACE. RETURN TO CONTENTS PAGE

Technical information by bore size

Bore size	3.66mm (33110)		3.66mm (34110)		3.66mm (34410)	
Inlet Size	3/8"	1/2"	3/8"	1/2"	3/8"	1/2"
Outlet Size	3/8"	1/2"	3/8"	1/2"	3/8"	1/2"
Flow Area	10.52mm²		10.52mm²		10.52mm²	
H - Height	92mm		92mm		92mm	
TÜV alloted outflow coefficient	0.73		0.73		0.73	
Weight (approximate) Kg	0.8		0.8		0.8	
Set Pressure range - PED (CE) bar	27 to 36 & 48.3 to 241.3 bar		27 to 36 & 48.3 to 241.3 bar		27 to 36 & 48.3 to 241.3 bar	
Relieving pressure/fully open pressure	**Set pressure +10%**					
Reseating pressure	**Set pressure -10%**					

Maximum permissible built up back pressure = 10% of set pressure at or below which flow is not reduced.

Standard INLET Connection Types

- BSP parallel male thread
- BSP taper male thread
- NPT male thread

Standard OUTLET Connection Types

- BSP parallel female thread
- NPT female thread

Valve Drawing

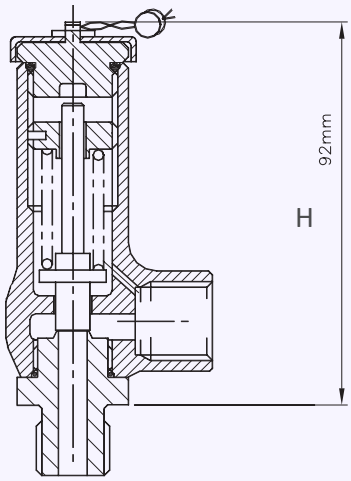

Valve Selection Guide

Valve type	Inlet Size	Inlet Thread Type	Outlet Thread Type	Seal Material	Set pressure
33110, 34110 or 34410 (see materials)	Select inlet size from above table	Select Inlet Thread type	Select Oulet Thread type	See table	Set pressure from available range

EAC marking available upon request

***Please send your selected details to Seetru and we can provide the full ordering code, price and lead-time.**

Example of Valve Selection Process

Example Selection	33110	1/2"	BSP parallel	BSP parallel	Viton	100 bar
	Valve Type	Inlet Size	Inlet Thread Type	Outlet Thread Type	Seal Material	Set Pressure

Capacity Table - In accordance with TÜV, AIR at 0°C and 1013mbar. Normal m³/hour

Type 33110, 34110 and 34410: Flow rates at 10% above the set pressure

Set Pressure		Bore Size (D0)				
		3.66mm				
bar	psi	Nm³/Hour				
27	391.5	160.7				
30	435	177.9				
33	478.5	195.2				
36	522	212.5				
48	696	281.5				
50	725	293.0				
60	870.00	350.6				
70	1015	408.1				
80	1160	456.7				
90	1305	523.2				
100	1450	580.8				
150	2175	868.5				
200	2900	1156.2				
241	3494.5	1392.1				

For any intermediate pressures/flows please contact Seetru

Enclosed Discharge Safety Relief Valves

for compressed air or gases | *cryogenic & liquefied gas* | *refrigeration* | *hydrogen*

Seetru Limited

Type 329

Safety valves with either Bronze or Stainless Steel body <
Enclosed discharge valve with threaded connections <

Example Applications

- Air/Gas systems
- Natural Gas
- CNG/LNG
- Pressure vessels
- Medical gases
- Technical Gases
- CO2 refrigeration
- Ammonia refrigeration (Stainless steel)
- Cryogenic applications
- Liquefied gases

Specifications

- Inlet connections: 3/8” to 3/4”
- Temperature range:-196°C to +70°C
- Pressure range: 53.0 to 370.0 bar

Approvals

- Designed in accordance with BS EN ISO-4126-1 &-7
- PED 2014/68/EU (CE)
- PE(S)R UK SI 2016 No. 1105 (UKCA)
- ASME BPVC VIII.1 & XIII (UV)
- CRN

Materials of Construction

Component	Material	Grade
Inlet	Stainless Steel	1.4401 (316)
Body	Bronze	C83600
	Stainless Steel	1.4408 (316)
Internal Parts	Brass	BS EN 12164 CW614N
	Stainless Steel	1.4401 (316)
Spring	Stainless Steel	1.4310 (302)

Seal Materials

Seal Material	Temperature Range
PTFE (up to 202 bar) PPS (202 to 370 bar)	-196°C to +70°C

Standard seal materials shown, others are available.

Top Fitting Options

- Standard Option
Sealed Cap (gas tight cap)

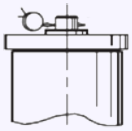

Technical information by bore size

Bore size	6mm		
Inlet Size	3/8"	1/2"	3/4"
Outlet Size	3/4"		
Flow Area	28.2mm²		
H - Height	100mm (53.0 to 240.0 bar) 114mm (240.0 to 370.0 bar)		
TÜV alloted outflow coefficient	0.77		
NB Certified rated slope (ASME)	0.7scfm/psia		
Weight (approximate) Kg	0.8		
Set Pressure range - PED (CE) bar	53.0 to 370.0		
Set Pressure range - ASME (UV) psi	768.5 to 5365.0		
Relieving pressure/fully open pressure	**Set pressure +10%**		
Reseating pressure	**Set pressure -15%**		

Maximum permissible built up back pressure = 10% of set pressure at or below which flow is not reduced.

Valve drawing

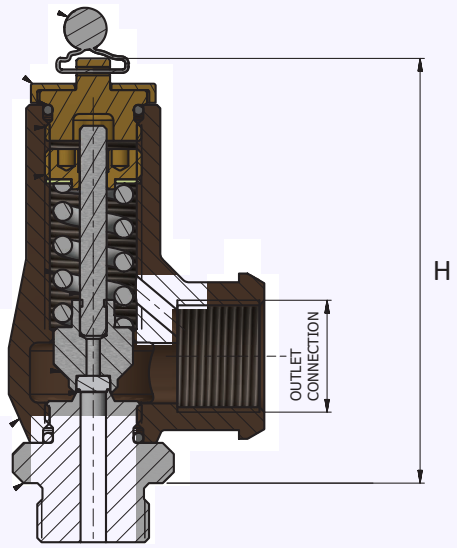

Standard Thread Connection Types

- BSP Parallel male thread
- BSP Taper male thread
- NPT male thread

Standard Outlet Connection Types

- BSP Parallel female thread
- NPT female thread

Valve Selection Guide

Valve Type	Body Material	Approval Required	Select Bore	Inlet Size	Inlet Thread Type	Outlet Thread Type	Easing Gear	Seal Material
329	Stainless Steel Bronze	**PED (CE)** **PED (CE), ASME (UV, NB), CRN**	6mm	Select inlet size from above table	Select Inlet thread type	Select Outlet thread type	Sealed cap	PTFE

EAC marking available upon request

Please send your selected details to Seetru and we can provide the full ordering code, price and lead-time

Example of Valve Selection Process

Example Selection	Bronze	329	PED (CE)	6	1/2"	NPT	NPT	Sealed Cap	PTFE	175 bar
	Body Material	Valve Type	Approval	Bore = 6mm	Inlet Size	Inlet Thread Type	Outlet Thread Type	Top Fitting	Seal	Set Pressure

Capacity Table - In accordance with TÜV, AIR at 0°C and 1013mbar. Normal m³/hour
Type 329: Flow rates at 10% above the set pressure

Set Pressure		Bore Size (D0)				
		6mm				
bar	psi	Nm³/Hour				
53	768.5	879.6				
60	870.0	993.8				
70	1015.0	1156.9				
80	1160.0	1320.0				
90	1305.0	1483.1				
100	1450.0	1646.3				
150	2175.0	2461.9				
200	2900.0	3277.5				
250	3625.0	4093.1				
300	4350.0	4908.7				
350	5075.0	5724.4				
370	5365.0	6050.6				

For any intermediate pressures/flows please contact Seetru

Capacity Table - In accordance with ASME BPVC.XIII, AIR at 60°F and 14.7 psia/scfm. SCFM
Type 329: Flow rates at 10% above the set pressure

Set Pressure		Bore Size (D0)				
		6mm				
psi	bar	SCFM				
768.5	53	602				
870	60	680				
913.5	63	714				
1203.5	83	937				
1305	90	1015				
1450	100	1127				
2175	150	1685				
2900	200	2243				
2929	202	2266				
3480	240	2690				
3625	250	2802				
4350	300	3360				
5075	350	3918				
5365	370	4141				

For any intermediate pressures/flows please contact Seetru

Enclosed Discharge Safety Relief Valves

for compressed air & gas *hydrogen*

Seetru Limited

Type B4605 / B6605 / 359

Safety valves made from Stainless Steel <
Enclosed discharge valve with threaded connections <

Example Applications

- Air/Gas compressors
- Natural Gas
- Pressure vessels
- Medical gases
- Technical Gases
- Hydrogen production/generation

Specifications

- Inlet connections: 3/8” and 1/2”
- Temperature range:
  - 0°C to 200°C (with 1.4057 (431) stainless steel inlet)
  - -50°C to 150°C (with 1.4401 (316) stainless steel inlet)
- Pressure range: 35.0 to 500.0 bar

Approvals

- Designed in accordance with BS EN ISO-4126-1 &-7
- PED 2014/68/EU (CE)
- PE(S)R UK SI 2016 No. 1105 (UKCA)

Materials of Construction

Component	Material	Grade
Inlet	Stainless Steel	1.4057 (431)
		1.4401 (316)
Body	Stainless Steel	1.4408 (316)
Internal Parts	Stainless Steel	1.4305 (303)
Spring	Stainless Steel	1.4310 (302)

Inlet Seat Material

This valve seals using a metal ball design

Seal Material	Temperature Range
Stainless steel 1.4057 (431)	0°C to +200°C
Stainless steel 1.4401 (316)	-50C to +150°C

Standard seal materials shown, others are available.

Top Fitting Options

- Standard Option
Sealed Cap (gas tight cap)

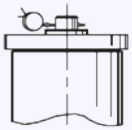

Technical information by bore size

Bore size	4.6mm	
Inlet Size	3/8"	1/2"
Outlet Size	1/2"	
Flow Area	16.6mm²	
H - Height	96mm	
TÜV alloted outflow coefficient	0.402	
NB Certified rated slope (ASME)	0.34 scfm/psia	
Weight (approximate) Kg	0.8	
Set Pressure range - PED (CE) bar	35.0 to 500.0	
Set Pressure range - ASME (UV) psi	507.5 to 7250.0	
Relieving pressure/fully open pressure	Set pressure +10%	
Reseating pressure	Set pressure -10%	

Maximum permissible built up back pressure = 10% of set pressure at or below which flow is not reduced

Valve drawing

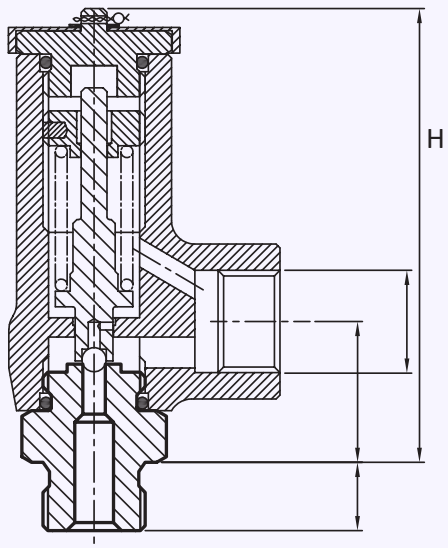

IMPORTANT NOTE:
These valves should only be tested for set pressure on liquid prior to final installation. Valves that are tested on air & fully lifted will cause damage to the sealing face.

Standard Thread Connection Types

- BSP Parallel male thread
- BSP Taper male thread
- NPT male thread

Standard Outlet Connection Types

- BSP Parallel female thread
- NPT female thread

Valve Selection Guide

Valve Type	Inlet Material	Approval Required (Avaialble for both Inlet materials)	Select Bore	Inlet Size	Inlet Thread Type	Outlet Thread Type	Easing Gear	Seal Material
B6605	Stainless Steel 1.4057 (431)	PED (CE)	4.66mm	Select inlet size from above table	Select Inlet thread type	Select Outlet thread type	Sealed cap	Metal ball seal
B4605	Stainless Steel 1.4401 (316)	PED (CE)						

EAC marking available upon request
***Please send your selected details to Seetru and we can provide the full ordering code, price and lead-time.**

Example of Valve Selection Process

Example Selection	1.4057 (431)	359	PED (CE)	4.66	1/2"	BSP taper	BSP	Sealed Cap	Ball Seal	385 bar
	Inlet Material	Valve Type	Approval	Bore = 4.6mm	Inlet Size	Inlet Thread Type	Outlet Thread Type	Top Fitting	Seal	Set Pressure

Capacity Table - In accordance with TÜV, AIR at 0°C and 1013mbar. Normal m³/hour
Flow rates at 10% above the set pressure

Set Pressure		Bore Size (D0)				
		4.6mm				
bar	psi	Nm³/Hour				
35	507.5	179.8				
50	725.0	254.9				
100	1450.0	505.2				
150	2175.0	755.5				
200	2900.0	1005.8				
250	3625.0	1256.0				
300	4350.0	1506.3				
350	5075.0	1756.6				
400	5800.0	2006.9				
450	6525.0	2257.2				
500	7250.0	2507.5				

HYDROGEN

Think Hydrogen ...Think Safety Valves

Your Reliable Partner in Your Hydrogen Future

Seetru supplies safety relief valves suitable for a wide range of hydrogen applications, including hydrogen generation, fuel cells, compressors and pumps, fuelling systems, storage, pressure vessels, piping systems, and transportation.

These valves can withstand set pressures up to 1100 bar, making them ideal for use in even the most demanding hydrogen applications. Seetru's valves are designed to open quickly and reliably when the system pressure exceeds the set pressure, allowing excess gas to escape safely. This helps to prevent damage to the system and protect personnel from injury.

SEETRU

- Generation
- Chemical & Process Industries
- Compression
- Storage & Transmission
- Power Generation Systems

www.seetru.com/hydrogen

www.seetru.com | info@seetru.com | +44 (0) 117 930 6100

Enclosed Discharge Safety Relief Valves

for compressed air or gases | *cryogenic & liquefied gas* | *hydrogen*

Seetru Limited

Type
94605 / 946H5 / 95605 / 956H5

Safety valves made from stainles steel <
Enclosed discharge with threaded connections <

Example Applications

- Air/Gas Compression
- Air/Gas Boosters
- Natural Gas
- Pressure Vessels
- Hydrogen Production
- Hydrogen Storage

Specifications

- **Inlet Connections**
  - ½" NPT, BSP & BSPT
  - 9/16" Cone & Thread
  - 3/4" Cone & Thread
- **Outlet Connections**
  - ½" NPT & BSP
  - ¾" NPT & BSP
  - 1" NPT & BSP
- **Temperature Range**
  - Type 94605 and 946H5 = 0° to 250°C
  - Type 95605 and 956H5 (H2 option) =-196°C to 250°C
- **Temperature Range (Special Options)**
  - High temperature option, up to 300°C, available upon request
  - -269°C version (up to 300 bar) available upon request
- **Pressure Range**
  - 35.0 to 515 bar (9*605)
  - 35.0 to 1100 bar (9*6H5)

  *Maximum set pressure for steam is 85 bar

Key Features

- Compact and space saving design
- Designed and built for repeatable operation
- Advanced sealing technology with super-lapped hard-faced seat and disc, designed to offer robust high-performance sealing
- Orientable gas-tight packed lever option (9*6H5 only)
- Simple and robust design with three moving parts
- Maintenance friendly design
- Designed with Hydrogen embrittlement resistant materials (H_2 option)

Materials of Construction

Component	Valve Type 2nd Digit	Material	Grade
Seat	4	Stainless	1.4057
	5		S20910
Body	4 & 5	Stainless	1.4401
Disc	4	Stainless	1.4057
	5	Ceramic	
Spring	4 & 5	Stainless	1.4401
Gaskets	4 & 5	PTFE	

For Hydrogen applications above 515 bar, a ceramic disc is required, use type 956H5

Approvals

- BS EN ISO 4126-1
- PED 2014/68/EU
  - Module B – TÜV Rheinland
  - Module D – LRQA Deutschland
- PE(S)R 2016 (UKCA)
  - Module B – TÜV UK
  - Module D – LRQA UK
- Seat tightness better than API 527

EAC marking available upon request

Top Fitting Options

- Sealed Cap (gas tight cap)

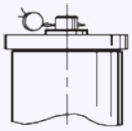

- Sealed lever (gas tight)

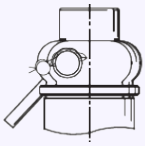

Technical information by bore size

Model No.	9*605		9*6H5		
Bore	4.6mm				
Inlet	1/2"	9/16"	1/2"	9/16"	3/4"
Outlet	1/2"		1/2"	3/4"	1"
Flow Area	16.6 mm²				
Height H	158		202		
Kdr	0.75				
Weight	1.5 kg		2.8 kg		

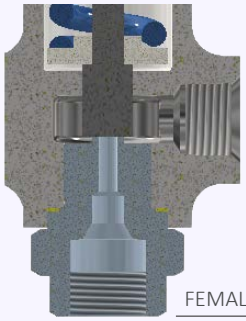

FEMALE CONE & THREAD INLET

9*6H5

9*605

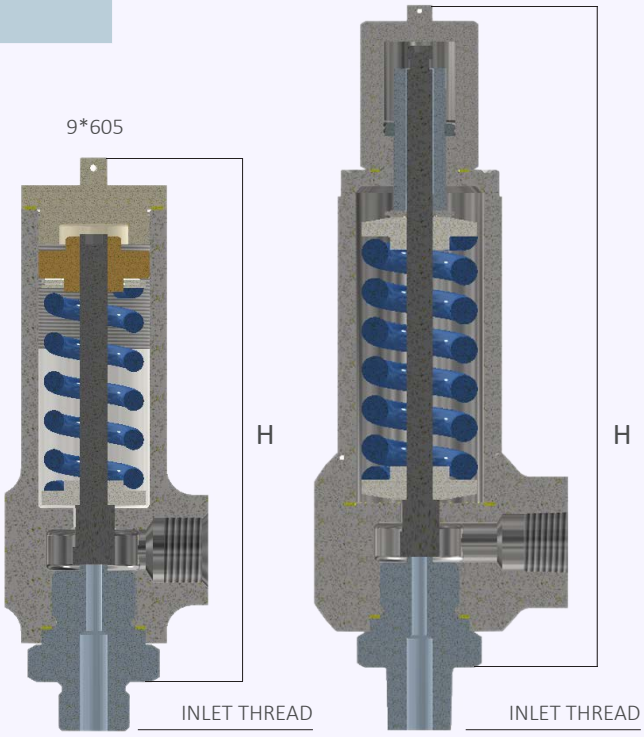

Standard INLET Connection Types

- BSP (male) max 515 bar
- BSPT (male) max 515 bar
- NPT (male) max 1034 bar
- Cone & Thread (female) max 1100 bar

Standard OUTLET Connection Types

- BSP (female)
- NPT (female)

Please send your selected details to Seetru and we can provide the full ordering code, price and lead-time.

Valve Selection Guide - Type 94605, 946H5, 95605 & 956H5

Valve type	H_2 or low temperature valve type 2nd digit		Inlet Size	Inlet Connection	Outlet Size	Outlet Connection	Easing Lever (Sealed Lever)
	Yes	No					
9*605	5	4	9/16" & 3/4"	C&T	1/2"	NPT, BSP	9*6H5 only
			1/2"	NPT, BSP, BSPT			
9*6H5			1/2"		1/2", 3/4", 1"		
			9/16" & 3/4"	C&T			

Example of Valve Selection Process for Order Code 956H5F1297

Example Selection	Approval	Materials from above Table	Bore	Inlet Size	Inlet Thread	Outlet Size	Outlet Thread	Duty	Set Pressure
	PED and UKCA (ASME in process)	5 = Body=1.4401, Seat=S20910, Disc=Ceramic	4.6mm	1/2"	NPT	3/4"	NPT	Hydrogen	1000 bar

Capacity Table -Per EN 4126-7 and at 10% Overpressure

Type 94605 / 946H5 / 95605 / 956H5: Flow rates at 10% above the set pressure.

Set Pressure		Flow of Air
bar	psi	Nm^3/hr
35	507.5	335.5
50	725	475.5
75	1087.5	709.0
100	1450	942.5
150	2175	1409.4
200	2900	1876.4
250	3625	2343.3
300	4350	2810.3
350	5075	3277.2
400	5800	3744.2
450	6525	4211.1
500	7250	4678.1
550	7975	5145.1
600	8700	5612.0
650	9425	6078.9
700	10150	6545.9
750	10875	7012.8
800	11600	7479.8
850	12325	7946.7
900	13050	8413.7
950	13775	8880.6
1000	14500	9347.6
1050	15225	9814.5
1100	15950	10281.5

Set Pressure		Flow of Hydrogen
bar	psi	Nm^3/hr
35	507.5	1273.2
50	725	1804.9
75	1087.5	2691.1
100	1450	3577.2
150	2175	5349.5
200	2900	7121.8
250	3625	8894.1
300	4350	10666.3
350	5075	12438.6
400	5800	14210.9
450	6525	15983.3
500	7250	17755.5
550	7975	19527.8
600	8700	21300.1
650	9425	23072.4
700	10150	24844.7
750	10875	26617.1
800	11600	28389.2
850	12325	30161.5
900	13050	31933.8
950	13775	33706.1
1000	14500	35478.5
1050	15225	37250.7
1100	15950	39023.0

Enclosed Discharge Safety Relief Valves

for compressed air or gases | *steam* | *hygienic*

Seetru Limited

Type 6G6 / 6G1

Clean Service/Hygienic Safety valves with Stainless Steel body <
Enclosed discharge valve with Tri-Clamp inlet connections <

Safety valve for food industry & other hygienic applications including clean steam & gas applications

Example Applications

- Compressed air or gas
- Food production plants
- Hygienic applications
- Pressure vessels
- Medical gases
- Technical gases
- Steam systems

Specifications

- Inlet connections: 1/2" to 1" Tr-Clamp (depending on bore size)
- Temperature:-15°C to +200°C (depending on seal material)
- Pressure range: 0.32 to 55.2 bar (depending on bore size)
  – Maximum 12 bar for Steam Applications.

Approvals

- Designed in accordance with BS EN ISO-4126-1 &-7
- PED 2014/68/EU (CE)
- PE(S)R UK SI 2016 No. 1105 (UKCA)
- ASME BPVC VIII.1 & XIII (UV)
- CRN

Materials of Construction

Component	Material	Grade
Inlet	Stainless Steel	1.4404 (316)
Body	Stainless Steel	1.4408 (316)
Internal parts	Stainless Steel	1.4401 (316)
Spring	Stainless Steel	1.4310 (302)

SURFACE FINISH
Process Contact Surface
In accordance with ASME BPE-2005 Table SF-5.
Surface designation Ra Max 15 µinches, 0.4 µm, Electropolished.

Other Surfaces
Not greater than 60 µinches, 1.5 µm.

Seal Materials

Seal Material	Temperature Range
Perfluoroelastomer (FFKM)	-15°C to +200°C

Standard seal materials shown, others are available.
Elastomer soft sealing specifically developed for food & pharmaceutical industries.

Compliant to:
1. FDA 21 CFR 177.2600
2. United States Pharmacopoeia (USP) Class VI
3. SP3A Sanitary Standards for Multiple Use Rubber Dairy Equipment No 18-03.

Easing Gear / Lifting Gear Options

- **Standard option**:

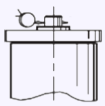

Sealed Cap (gas tight cap)

- **Other Options:**

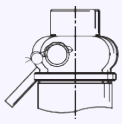

Sealed lever (gas tight)

Technical information by bore size

Bore size	9.5mm (6G610/6G110)		13.7mm (6G613/6G113)	
Inlet Size	1/2"	3/4"	3/4"	1"
Outlet Size	3/4"		1"	
Flow Area	70.9mm²		147.7mm²	
H - Height (Sealed cap version)	160mm		180mm	
TÜV alloted outflow coefficient	0.77 above 1.55 bar		0.77	
NB Certified rated slope (ASME)	1.71 scfm/psia		3.47 scfm/psia	
Weight (approximate) Kg	0.9		1.3	
Set Pressure range - PED (CE) bar	0.48 to 55.2 (max 12 bar for Steam)		0.32 to 49.0 (max 12 bar for Steam)	
Set Pressure range - ASME (UV) psi	22.5 to 800.4		20.3 to 710.5	
Relieving pressure/fully open pressure	**Set pressure +10% (0.1 bar below 1.0 bar)**		**Set pressure + 10% (0.3 bar below 1.4 bar)**	
Reseating pressure	**Set pressure -10% (0.3 bar minimum)**			

Stable operation on flows down to 50% of valve rated capacity.

Standard Thread Connection Types

- Tri-Clamp® compatable generally in accordance with ASME BPE 2005 & BS 4825-3.

Standard Outlet Connection Types

- BSP Female Pipe threads (G)

Valve drawing

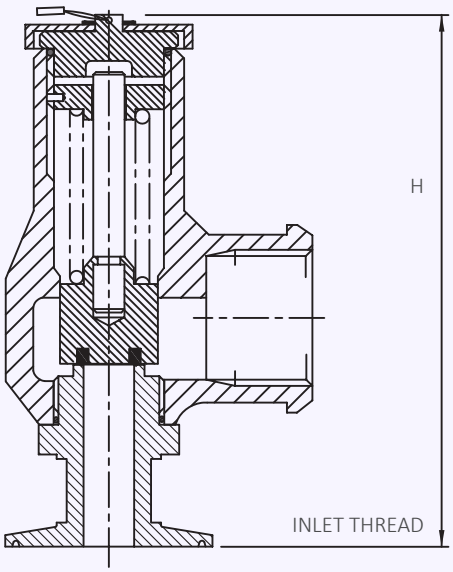

Valve Selection Guide

Approval Required	Valve type	Select Bore	Inlet Size	Easing Gear	Seal Material
PED (CE)	6G6	Select bore size from above table	Select inlet size from above table	Select easing gear/top fitting	Perfluroelastomer (FFKM)
PED (CE), ASME (UV) & CR	6G1				Other

EAC marking available upon request

***Please send your selected details to Seetru and we can provide the full ordering code, price and lead-time.**

Example of Valve Selection Process

Example Selection	PED, ASME & CRN	6G1	9.5mm	1/2"	Sealed Cap	Perfluroelastomer (FFKM)	3.5 bar
	Approval	Valve Type	Bore Size	Inlet Size	Easing Gear	Seal	Set Pressure

Capacity Table - In accordance with TÜV, AIR at 0°C and 1013mbar. Normal m³/hour

Type 6G6: Flow rates at 10% above the set pressure

Set Pressure		Bore Size (D0)	
		9.5mm (6G610)	13.7mm (6G613)
bar	psi	Nm³/Hour	Nm³/Hour
0.32	4.64		123.9
0.48	6.96	46.5	138.2
1	14.5	71.4	178.8
2	29	119.5	248.4
3	43.5	160.4	333.5
4	58	201.3	418.5
5	72.5	242.1	503.6
6	87	283.0	588.6
7	101.5	323.9	673.6
8	116	364.8	758.7
9	130.5	405.7	843.7
10	145	446.6	928.8
15	217.5	651.1	1354.0
20	290	855.5	1779.2
25	362.5	1060.0	2204.5
30	435	1264.5	2629.7
35	507.5	1468.9	3054.9
40	580	1673.4	3480.2
45	652.5	1877.9	3905.4
49	710.5	2041.5	4245.6
50	725	2082.4	
55.2	800.4	2295.0	

For any intermediate pressures/flows please contact Seetru

Capacity Table - In accordance ASME section VIII Div I, AIR at 60°F and 14.7 psia/scfm. SCFM

Type 6G1: Flow rates at 10% above the set pressure

Set Pressure		Bore Size (D0)	
		9.5mm (6G610)	13.7mm (6G613)
psi	bar	SCFM	SCFM
20.3	1.40		131.9
22.5	2.50	68.7	139.4
30	2.07	81.5	165.5
34.8	2.80	90.6	183.8
40	2.76	100.4	203.7
43.5	3.00	106.9	217.0
50	3.45	119.2	241.8
82	5.66	179.3	363.9
100	6.90	213.2	432.6
150	10.34	307.2	623.4
200	13.79	401.2	814.2
250	17.24	495.3	1005.0
300	20.69	589.3	1195.8
350	24.14	683.3	1386.6
400	27.59	777.4	1577.4
435	30.00	843.2	1711.0
450	31.03	871.4	1768.2
500	34.48	965.4	1959.0
507.5	35.00	979.5	1987.6
550	37.93	1059.4	2149.8
600	41.38	1153.4	2340.6
650	44.83	1247.5	2531.4
700	48.28	1341.5	2722.2
710.5	49.00	1361.3	2762.3
750	51.72	1435.5	
800.4	55.20	1530.3	

For any intermediate pressures/flows please contact Seetru

Enclosed Discharge Safety Relief Valves

Seetru Limited

for compressed air or gases | *cryogenic & liquefied gas* | *steam* | *refrigeration* | *hydrogen*

Type 946 Flanged

Safety valves made from Stainless Steel <
Enclosed discharge valve with flanged connections <
Metal to metal sealing <

Example Applications

- Air / gas compressors
- Pressure vessels
- Medical gases/Technical gases
- Refrigeration (including ammonia)
- Thermal relief
- Steam systems
- Hydrogen

Specifications

- Inlet connections: DN15 (1/2), DN20 (3/4") or DN25 (1") flange – DIN EN1092 and ANSI flanges are available
- Temperature range: -196°C to +250°C (depending on body o'ring material)
- Pressure range: 0.3 to 28.0 bar

Approvals

- Designed in accordance with BS EN ISO-4126-1 &-7
- PED 2014/68/EU (CE)
- PE(S)R UK SI 2016 No. 1105 (UKCA)
- Leak tightness at 90% set pressure to API 527 and in accordance with EN ISO 4126-1

Materials of Construction

Component	Material	Grade
Inlet & Outlet Flanges	Stainless Steel	1.4401 (316)
Body	Stainless Steel	1.4408 (316)
Internal Parts	Stainless Steel	1.4401 (316)
Spring	Stainless Steel	1.4310 (302)
Disc	Stainless Steel	S20910

Seal Materials

This valve using metal to metal sealing. There is a choice of o'ring used for the sealed cap/lever.

O'ring material – Top cap	Temperature Range
Viton® (FKM)	-20°C to +200°C
Nitrile (NBR)	-20°C to +120°C
Silicone	-50°C to +200°C
EPDM	-55°C to +130°C
PTFE	-196°C to +200°C

Standard seal materials shown, others are available.

Easing Gear / Lifting Gear / Top Fitting Options

- Sealed Cap (Gas Tight Cap)

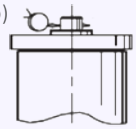

- Sealed lever (Gas Tight)

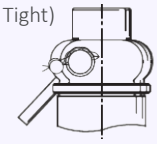

- Sealed lever (With Test Gag)

A test gag is used to prevent the valve from opening at the set pressure during hydraulic testing when commissioning a system. Once tested, the gag screw is removed and replaced with a short blanking plug before the valve is place in service.

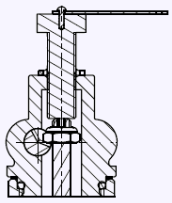

Technical information by bore size

Bore size	10mm (94610)			15mm (94615)
Inlet Size	DN15 (1/2”)	DN20 (3/4”)	DN25 (1”)	DN25 (1")
Outlet Size	DN25 (1")			DN40 (1 1/2")
Flow Area	78.5mm²			177mm²
H - Height (Sealed Lever version)	200mm			253mm
TÜV alloted outflow coefficient	0.85 (0.7 below 0.8 bar)			0.85 (0.7 below 0.8 bar)
Weight (approximate) Kg	3.0			5.3
Set Pressure range - PED (CE) bar	0.3 to 28.0			0.3 to 28.0
Relieving pressure/fully open pressure	**Set pressure +10% (0.1 bar below 1.0 bar)**			
Reseating pressure	**Set pressure -10% (0.3 bar below 3.0 bar)**			

- TÜV alloted outflow coefficients for pressures above 3.0 bar, for lower pressures please see the flow rate tables or contact Seetru.
- Maximum permissible built up back pressure = 10% of set pressure at or below which flow is not reduced.
- Stable operation on flows down to 50% of valve rated capacity.
- Leak tightness at 90% set pressure to API 527 and in accordance with EN ISO 4126-1.

Valve Drawing

10mm bore – 94610

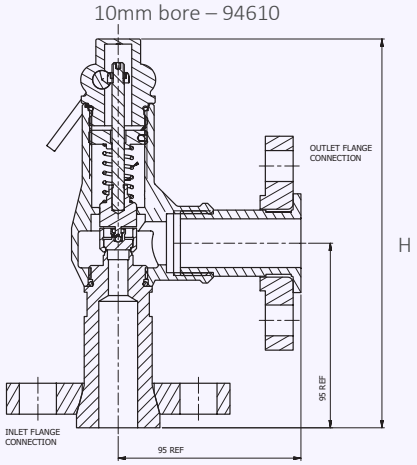

15mm bore – 94615

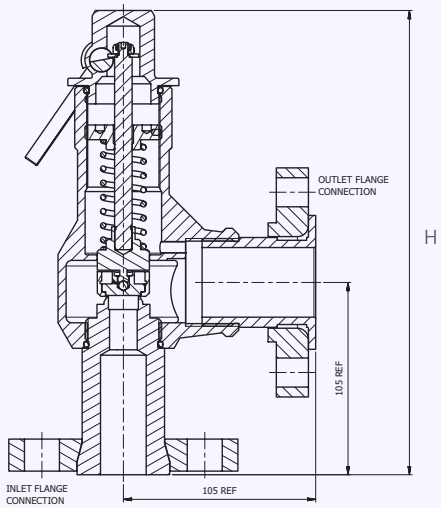

Standard INLET Connection Types

- DIN EN1092 Flange PN16, PN25 or PN40
- ASME Flange CL150, CL300 or CL600

Standard OUTLET Connection Types

- DIN EN1092 Flange PN16, PN25 or PN40
- ASME Flange CL150 or CL300

Valve Selection Guide

Valve type	Select Bore	Inlet Size	Inlet Flange Type	Outlet Flange Type	Easing Gear	O'ring material (for cap)
946	Select bore size from above table	Select inlet size from above table	Select Inlet Flange type	Select Outlet Flange type	Select easing gear/top fitting	See table

EAC marking available upon request

***Please send your selected details to Seetru and we can provide the full ordering code, price and lead-time.**

Example of Valve Selection Process

Example Selection	946	10	DN20	DIN EN1092 Flange PN16	DIN EN1092 Flange PN16	Sealed Lever	Viton	10.5 bar	16.2 bar
	Valve Type	Bore = 10mm	Inlet Size	Inlet Flange Type	Outlet Flange Type	Top Fitting	O'ring	Set Pressure	Set Pressure

Capacity Table - In accordance with TÜV, AIR at 0°C and 1013mbar. Normal m³/hour
Type 946: Flow rates at 10% above the set pressure

Set Pressure		Bore Size (D0)				
		10mm	15mm			
bar	psi	Nm³/Hour	Nm³/Hour			
0.3	4.35	48.5	109.2			
0.5	7.25	59.0	132.9			
1	14.5	96.1	216.2			
2	29	146.1	328.7			
3	43.5	196.1	441.3			
4	58	246.1	553.8			
5	72.5	296.1	666.4			
6	87.00	346.2	778.9			
7	101.5	396.2	891.4			
8	116	446.2	1004.0			
9	130.5	496.2	1116.5			
10	145	546.7	1229.1			
15	217.5	796.3	1791.8			
20	290	1046.4	2354.6			
25	362.5	1296.5	2917.3			
28	406	1446.6	3254.9			

For any intermediate pressures/flows please contact Seetru

Capacity Table - In accordance with TÜV, STEAM. Kg/hour
Type 946: Flow rates at 10% above the set pressure

Set Pressure		Bore Size (D0)				
		10mm	15mm			
bar	psi	Kg/hour of Steam	Kg/hour of Steam			
0.3	4.35	37.6	84.5			
0.5	7.25	46.6	104.8			
1	14.5	76.6	172.5			
2	29	115.1	259.0			
3	43.5	153.2	344.6			
4	58	190.9	429.7			
5	72.5	228.6	514.3			
6	87.00	266.1	598.6			
7	101.5	303.4	682.6			
8	116	340.6	766.5			
9	130.5	377.9	850.4			
10	145	415.1	933.9			
15	217.5	600.3	1350.7			
20	290	785.4	1767.2			
25	362.5	970.5	2183.7			
28	406	1081.9	2434.4			

For any intermediate pressures/flows please contact Seetru

Enclosed Discharge Safety Relief Valves

for compressed air & gas *hydrogen*

Seetru Limited

Type 64613 / 64113 Flanged

Safety valves with Stainless Steel body <
Enclosed discharge valve with flanged connections <

Example Applications

- Air / gas compressors
- Pressure vessels
- Pneumatic systems
- Medical gases
- Technical gases

Specifications

- Inlet connections: DN20 (3/4”) or DN25 (1”) DIN or ANSI flanges
- Temperature:-40°C to +200°C (depending on seal material)
- Pressure range: 0.32 to 49.0 bar

Approvals

- Designed in accordance with BS EN ISO-4126-1 &-7
- PED 2014/68/EU (CE)
- PE(S)R UK SI 2016 No. 1105 (UKCA)
- ASME BPVC VIII.1 & XIII (UV)
- CRN

Materials of Construction

Component	Material	Grade
Inlet	Stainless Steel	1.4401 (316)
Body	Stainless Steel	1.4408 (316)
Internal parts	Stainless Steel	1.4401 (316)
Spring	Stainless Steel	1.4310 (302)

Seal Materials

Seal Material	Temperature Range
Viton® (FKM)	-15°C to +200°C
Nitrile (NBR)	-40°C to +120°C

Standard seal materials shown, others are available.

Easing Gear / Lifting Gear Options

Standard Option: Sealed Cap (gas tight cap)

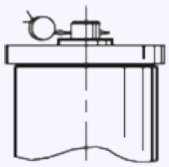

Other Option: Sealed lever (gas tight)

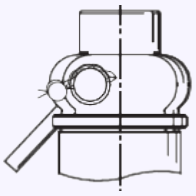

Technical information by bore size

Bore size	13.7mm	
Inlet Size	DN20 (3/4”)	DN25 (1”)
Outlet Size	DN25 (1")	
Flow Area	147.4mm²	
H - Height (Sealed cap version)	197mm (up to 35 bar) 226mm (35-49 bar)	
TÜV alloted outflow coefficient	0.77	
NB Certified rated slope (ASME)	3.47 scfm/psia	
Weight (approximate) Kg	3.2	
Set Pressure range - PED (CE) bar	0.32 to 49.0	
Set Pressure range - ASME (UV) psi	20.3 to 710.5	
Relieving pressure/fully open pressure	Set pressure +10% (0.3 bar below 1.4 bar)	
Reseating pressure	Set pressure-10% (0.3 bar minimum)	

Maximum permissible built up back pressure = 10% of set pressure at or below which flow is not reduced. Stable operation on flows down to 50% of valve rated capacity.

Valve Drawing

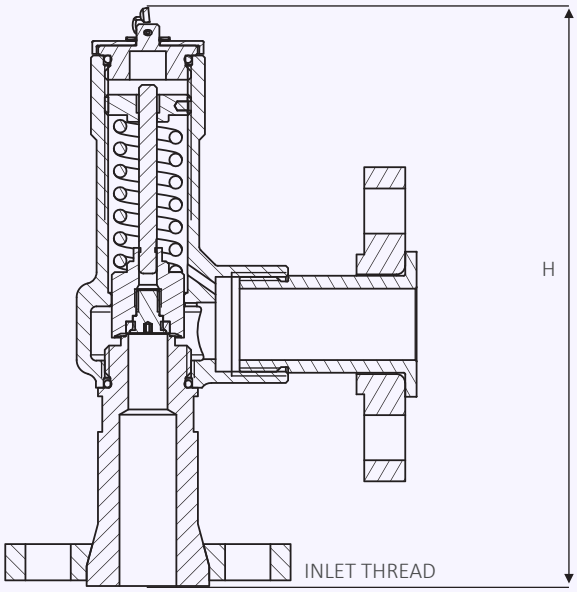

Standard Thread Connection Types

- DIN EN1092 Flange PN16, PN25 or PN40
- ASME Flange CL150, CL300 or CL600

Standard Outlet Connection Types

- DIN EN1092 Flange PN16, PN25 or PN40
- ASME Flange CL150, CL300 or CL600

Valve Selection Guide

Approval Required	Valve type	Inlet Size	Inlet Flange Type	Outlet Flange Type	Easing Gear	Seal Material
PED (CE)	64613	Select inlet size from above table	Select Inlet flange type	Select Outlet flange type	Select easing gear/top fitting	Viton® (FKM)
PED (CE), ASME (UV) & CRN	64113					Nitrile (NBR)
						Other

EAC marking available upon request

***Please send your selected details to Seetru and we can provide the full ordering code, price and lead-time.**

Example of Valve Selection Process

Example Selection	PED, ASME & CRN	64113	DN20	DIN EN1092 Flange PN16	DIN EN1092 Flange PN16	Sealed Cap	Viton	3.5 bar
	Approval	Valve Type	Inlet Size	Inlet Flange Type	Outlet Flange Type	Easing Gear	Seal	Set Pressure

Capacity Table - In accordance with TÜV, AIR at 0°C and 1013mbar. Normal m³/hour

Type 64613: Flow rates at 10% above the set pressure

Set Pressure		Bore Size (D0)
		13.7mm
bar	psi	Nm³/Hour
0.32	4.64	160.1
1	14.5	231.2
2	29	321.1
3	43.5	431.0
4	58	540.9
5	72.5	650.8
6	87	760.8
7	101.5	870.7
8	116	980.6
9	130.5	1090.5
10	145	1200.5
15	217.5	1750.1
20	290	2299.7
25	362.5	2849.3
30	435	3398.9
35	507.5	3948.5
40	580	4498.1
45	652.5	5047.7
49	710.5	5487.4

For any intermediate pressures/flows please contact Seetru

Capacity Table - In accordance with ASME BPVC.XIII, AIR at 60°F and 14.7 psia/scfm. SCFM

Type 64113: Flow rates at 10% above the set pressure

Set Pressure		Bore Size (D0)
		13.7mm
psi	bar	SCFM
20.3	1.40	131.9
22.5	2.50	139.4
30	2.07	165.5
34.8	2.80	183.8
40	2.76	203.7
43.5	3.00	217.0
50	3.45	241.8
82	5.66	363.9
100	6.90	432.6
150	10.34	623.4
200	13.79	814.2
250	17.24	1005.0
300	20.69	1195.8
350	24.14	1386.6
400	27.59	1577.4
435	30.00	1711.0
450	31.03	1768.2
500	34.48	1959.0
507.5	35.00	1987.6
550	37.93	2149.8
600	41.38	2340.6
650	44.83	2531.4
700	48.28	2722.2
710.5	49.00	2762.3

For any intermediate pressures/flows please contact Seetru

Safety Valves for Steam

STEAM

Reliability Guaranteed

The Seetru range of safety valves for steam applications is compact and highly efficient, designed with exclusive sealing technology offering repeatable sealing performance. Typical uses of these valves include autoclaves, the pharmaceutical industry, vending machines, hot water boilers, steam boilers, and plants as well as clean steam applications. Suitable for use up to 250°C and minimum dryness factor of 0.97.

SEETRU

- Autoclaves and sterilizers
- Breweries
- Clean steam
- Pharmaceutical industry
- Coffee machines
- Multi-purpose plants
- Steam boilers and plants

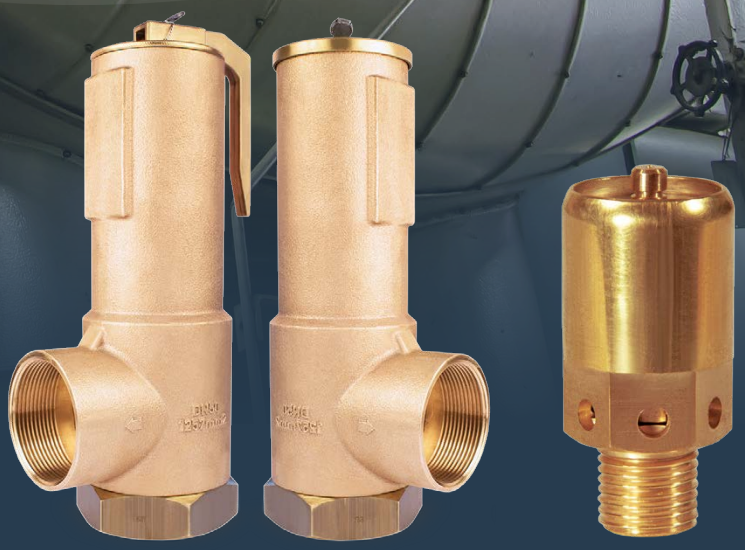

www.seetru.com/steam

www.seetru.com | info@seetru.com | +44 (0) 117 930 6100

Atmospheric Discharge Safety Relief Valves

for steam

Seetru Limited

Type 75008

Safety valves made from Brass <
Atmospheric discharge with threaded connections <

Example Applications

- Small steam vessels
- Industrial coffee machines
- Autoclaves / Steam sterilisers
- Small steam boilers

Specifications

- Inlet connections: 1/4” to 1/2”
- Temperature: Up to 150°C (depending on seal material)
- Pressure range: 0.27 to 5.0 bar

Approvals

- Designed in accordance with BS EN ISO-4126-1 &-7
- PED 2014/68/EU (CE)
- PE(S)R UK SI 2016 No. 1105 (UKCA)

Materials of Construction

Component	Material	Grade
Body	Brass	BS2874 CZ132
Internal Parts	Brass	BS2874 CZ132
Spring	Stainless Steel	302 S56)

Seal Materials

Seal Material	Temperature Range
Silicone	-40°C to +150°C
EPDM	-45°C to +140°C
Aflas	-20°C to +200°C

Easing Gear / Lifting Gear Options

- **Standard option** – Ring Pull
- Other options – Rota Lift or Spindle lift

Technical information by bore size

Bore size	7.9mm		
Inlet Size	1/4"	3/8"	1/2"
Flow Area	49mm²		
TÜV alloted outflow coefficient	0.66		
Weight (approximate) Kg	0.1		
Set Pressure range - PED (CE) bar	0.27 to 5.0 bar		
Relieving Pressure/Fully Open Pressure	**Set pressure +10%** (0.1 bar below 1.0 bar)		
Reseating Pressure	**Set pressure -10%** (0.3 bar below 3.0 bar)		

Valves with Rota-lift Easing Gear

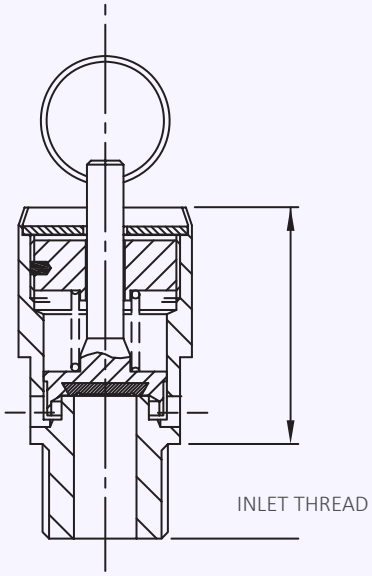

Standard Thread Connection Types

- BSP Parallel male thread
- BSP Taper male thread
- NPT male thread

Valve Selection Guide

Approval Required	Valve type	Inlet Size	Thread Type	Easing Gear	Seal Material
PED (CE)	75008	Select inlet size from above table	Select thread type	Ring-Pull is the standard option (see other options)	Silicone
					EPDM
					Aflas

EAC marking available upon request

***Please send your selected details to Seetru and we can provide the full ordering code, price and lead-time.**

Example of Valve Selection Process

Example Selection	CE	75008	1/4"	BSP Taper	Pull-Ring	Silicone	1.5 bar
	Approval	Valve Type	Inlet Size	Thread Type	Easing Gear	Seal	Set Pressure

Capacity Table - In accordance with TÜV, STEAM Kg/Hr
Type 75008 Flow rates at 10% above the set pressure

Set Pressure		Bore Size (D0)				
		3.2mm				
bar	psi	Kg/Hr of Steam				
0.27	3.9	21.1				
0.5	7.3	27.4				
1.0	14.5	37.1				
1.5	21.8	46.5				
2.0	29.0	55.8				
3.0	43.5	74.2				
4.0	58.0	92.5				
5.0	72.5	110.7				

REFRIGERATION

Safety Valves for Refrigeration

Essential components of any refrigeration system

The Seetru range of safety valves for refrigeration applications is designed to meet the needs of the refrigeration industry, offering safety valve technology for compressor manufacturers, industrial refrigeration, commercial refrigeration, ice-making systems, and air conditioning. Safety valves are compact and designed with bonded sealing technology and the highest possible sealing performance to comply with the most stringent environmental standards.

SEETRU

- Compressor manufacture
- Industrial refrigeration
- Commercial refrigeration
- Ice making machinery
- Air conditioning
- R744 CO2 refrigeration
- R717 Ammonia refrigeration (stainless steel valves)

www.seetru.com/refrigeration

www.seetru.com | info@seetru.com | +44 (0) 117 930 6100

Atmospheric Discharge Safety Relief Valves

for refrigeration

Seetru Limited

Type 319

Inline Safety Valves made from Brass <
Atmospheric discharge valve with threaded connections <

Example Applications

- Refrigeration compressor manufacture
- Industrial refrigeration
- Commercial refrigeration
- Ice making machinery
- Air conditioning

Specifications

- Inlet connections: 3/8” to 1/2” or 7/8” x 14UNF (depending on bore size)
- Temperature:-30°C to +200°C
- Pressure range: 13.5 to 55.2 bar (depending on bore size)

Approvals

- Designed in accordance with BS EN ISO-4126-1 &-7
- PED 2014/68/EU (CE)
- PE(S)R UK SI 2016 No. 1105 (UKCA)
- ASME BPVC VIII.1 & XIII (UV)
- CRN

Materials of Construction

Component	Material	Grade
Inlet	Brass	CW614N
Body	Brass	CW614N
Internal Parts	Brass	CW614N
Spring	Stainless Steel	1.4310 (302) & 1.4568 (301)

Seal Materials

Seal Material	Temperature Range
Perfluroelastomer (FFKM)	-30°C to +200°C

Standard seal materials shown, others are available.

Technical information by bore size

Bore size	9.5		13.08mm	
Inlet Size	3/8"	1/2"	1/2"	7/8" (UNF)
Outlet Size	1/2" or 5/8" Flare		3/4" NPT Female	
Flow Area	71mm²		134.4mm²	
H - Height	99mm		103mm	
TÜV alloted outflow coefficient	0.485		0.71	
NB Certified rated slope (ASME)	1.04 scfm/psia		3.47 scfm/psia	
Weight (approximate) Kg	0.8		1.3	
Set Pressure range - PED (CE) bar	13.5 to 50.0		16.2 to 26.8	
Set Pressure range - ASME (UV) psi	195.75 to 725.0		235.0 to 388.6	
Relieving pressure/fully open pressure	**Set pressure +10%**			
Reseating pressure	**Set pressure -10%**			

Maximum permissible built up back pressure = 10% of set pressure at or below which flow is not reduced.
Stable operation on flows down to 50% of valve rated capacity.

Valve drawing

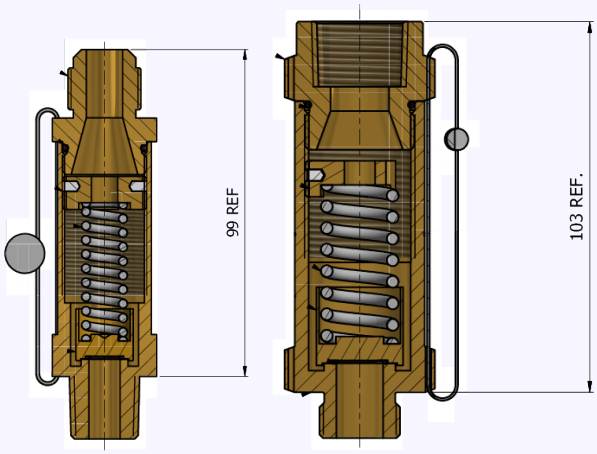

Standard INLET Thread Connection Types

- NPT male thread
- UNF male thread

Standard OUTLET Thread Connection Types

- Flare outlet
- NPT female thread

Valve Selection Guide

Approval Required	Select Bore	Inlet Size	Inlet Thread Type	Outlet Threa Type	Seal Material
PED (CE)	Select bore size from above table	Select inlet size from above table	Select Inlet thread type	Select Outlet thread type	Perfluroelastomer (FFKM)
PED (CE), ASME (UV) & CRN					

EAC marking available upon request
***Please send your selected details to Seetru and we can provide the full ordering code, price and lead-time.**

Example of Valve Selection Process

Example Selection	CE/PED, ASME/UV & CRN	9.5	1/2"	NPT	5/8" Flare	FFKM	16.2 bar/ 235 psi
	Approval	Bore = 9.5mm	Inlet Size	Inlet Thread Type	Outlet	Seal	Set Pressure

Capacity Table - In accordance with ISO 4126, Air at 0°C at 1.013 bar - Kg/min
Type 319-Inline valve: Flow rates at 10% above the set pressure

Set Pressure		Bore Size (D0)				
		9.5mm	13.08mm			
bar	psi	Kg/min	Kg/Min			
13.5	195.75	7.9				
14	203	8.2				
16	232	9.3				
16.2	234.9	9.5	18.7			
18	261	10.4				
20	290	11.5				
24	348	13.7				
25.9	375.55	14.8	29.3			
26	377	14.9				
26.8	388.6	15.4	30.2			
28	406	15.9				
30	435	17.1				
35	507.5	19.9				
40	580	22.7				
45	652.5	25.5				
50	725	28.2				

For any intermediate pressures/flows please contact Seetru

Capacity Table - In accordance with ASME BPVC.XIII, AIR at 60°F and 14.7 psia/scfm. SCFM
Type 319-Inline Valve: Flow rates at 10% above the set pressure

Set Pressure		Bore Size (D0)				
		9.5mm	13.08mm			
psi	bar	SCFM	SCFM			
195.75	13.50	239.2				
200	13.79	244.0				
235	16.20	284.0	609.0			
250	17.24	301.2				
300	20.69	358.5				
325	22.41	387.0				
350	24.14	415.5				
375.6	25.90	444.9	954.0			
388.6	26.80	459.9	987.0			
400	27.59	472.9				
450	31.03	530.0				
500	34.48	587.0				
550	37.93	644.5				
600	41.38	702.0				
650	44.83	759.0				
700	48.28	816.0				
725	50.00	845.0				

For any intermediate pressures/flows please contact Seetru

Enclosed Discharge Safety Relief Valves

for refrigeration

Seetru Limited

Type 636 / 631

Safety valves with bronze body <
Enclosed discharge valve with threaded connections <

Example Applications

- Compressor manufacture
- Industrial refrigeration
- Commercial refrigeration
- Ice making machinery
- Air conditioning

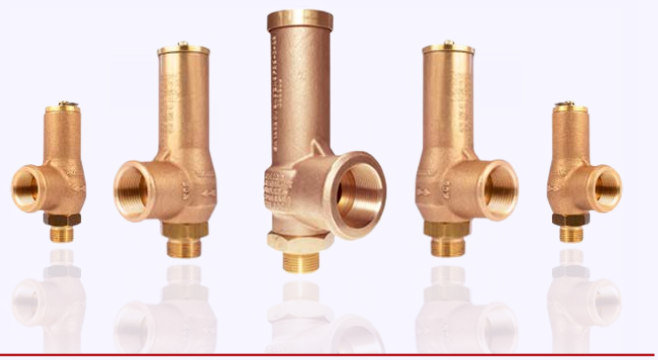

Specifications

- Inlet connections: 3/8” to 1 1/2” (depending on bore size)
- Temperature:-30°C to +200°C
- Pressure range: 6.6 to 55.2 bar (depending on bore size)

Approvals

- Designed in accordance with BS EN ISO-4126-1 &-7
- PED 2014/68/EU (CE)
- PE(S)R UK SI 2016 No. 1105 (UKCA)
- ASME BPVC VIII.1 & XIII (UV)
- CRN

Materials of Construction

Component	Material	Grade
Inlet	Brass	CW614N
Body	Bronze	CC491K SB-62 C83600
Internal Parts	Brass	CW614N
Spring	Stainless Steel	1.4310 (302)

Seal Materials

Seal Material	Temperature Range
Perfluroelastomer (FFKM)	-30°C to +200°C

Standard seal materials shown, others are available.

Valve cap / Top Fitting

- **Standard option** – Sealed Cap (gas tight cap)

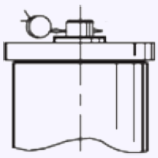

- **Other option** – Sealed lever (gas tight)

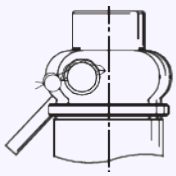

Technical information by bore size

Bore size	9.5			13.7mm			17mm		
Inlet Size	3/8"	1/2"	3/4"	1/2"	3/4"	1"	1"	1 1/4"	1 1/2"
Outlet Size	3/4"			1"			1 1/2"		
Flow Area	70.9mm²			147.7mm²			227mm²		
H - Height (Rota-lift cap version)	99mm (up to 33 bar) 113mm (33-55.2 bar)			135mm (up to 33 bar) 168mm (33-49 bar)			204mm		
TÜV alloted outflow coefficient	0.77			0.77			0.77		
NB Certified rated slope (ASME)	1.74 scfm/psia			3.47 scfm/psia			5.60 scfm/psia		
Weight (approximate) Kg	0.8			1.1			3.6		
Set Pressure range - PED (CE) bar	7.0 to 55.2			7.0 to 49.0			6.6 to 35.0		
Set Pressure range - ASME (UV) psi	101.5 to 800.4			101.5 to 710.5			95.7 to 507.5		
Relieving pressure/fully open pressure	**Set pressure +10%**								
Reseating pressure	**Set pressure -10%**								

Maximum permissible built up back pressure = 10% of set pressure at or below which flow is not reduced.
Stable operation on flows down to 50% of valve rated capacity.

Standard INLET Thread Connection Types

- BSP Parallel male thread
- BSP Taper male thread
- NPT male thread

Standard OUTLET Thread Connection Types

- BSP Parallel female thread
- NPT female thread

Valves with Rota-lift Easing Gear

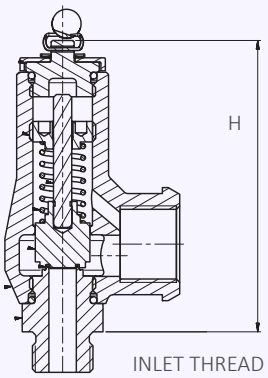

Valve Selection Guide

Approval Required	Valve type	Select Bore	Inlet Size	Inlet Thread Type	Outlet Threa Type	Easing Gear	Seal Material
PED (CE)	636	Select bore size from above table	Select inlet size from above table	Select Inlet thread type	Select Outlet thread type	Sealed Cap is the standard option.	Perfluroelastomer (FFKM)
PED (CE), ASME (UV) & CRN	631						

EAC marking available upon request
***Please send your selected details to Seetru and we can provide the full ordering code, price and lead-time.**

Example of Valve Selection Process

Example Selection	CE/PED, ASME/UV & CRN	631	9.5	3/4"	NPT	NPT	Sealed Cap	FFKM	16.2 bar
	Approval	Valve Type	Bore = 9.5mm	Inlet Size	Inlet Thread Type	Outlet Thread Type	Easing Gear	Seal	Set Pressure

Capacity Table - In accordance with TÜV, AIR at 0°C and 1013mbar. Normal m³/hour
Type 636: Flow rates at 10% above the set pressure

Set Pressure		Bore Size (D0)				
		9.5mm	13.7mm	17mm		
bar	psi	Nm³/Hour	Nm³/Hour	Nm³/Hour		
7	101.5	323.9	673.6	1037.3		
8	116	364.8	758.7	1168.2		
9	130.5	405.7	843.7	1299.2		
10	145	446.6	928.8	1430.2		
15	217.5	651.1	1354.0	2084.9		
20	290	855.6	1779.3	2739.7		
25	362.5	1060.0	2204.5	3394.4		
30	435	1264.5	2629.7	4049.2		
35	507.5	1468.9	3054.9	4703.9		
40	580	1673.4	3480.2			
45	652.5	1877.9	3905.4			
49	710.5	2041.5	4245.6			
50	725	2082.4				
55.2	800.4	2295.0				

For any intermediate pressures/flows please contact Seetru

Capacity Table - In accordance with ASME BPVC.XIII, AIR at 60°F and 14.7 psia/scfm. SCFM
Type 631: Flow rates at 10% above the set pressure

Set Pressure		Bore Size (D0)				
		9.5mm	13.7mm	17mm		
psi	bar	SCFM	SCFM	SCFM		
100	6.90	213.2	432.6	698.1		
150	10.34	307.2	623.4	1006.1		
200	13.79	401.2	814.2	1314.0		
250	17.24	495.3	1005.0	1621.9		
300	20.69	589.3	1195.8	1929.8		
350	24.14	683.3	1386.6	2237.8		
400	27.59	777.4	1577.4	2545.7		
435	30.00	843.2	1711.0	2761.2		
450	31.03	871.4	1768.2	2853.6		
500	34.48	965.4	1959.0	3161.5		
507.5	35.00	979.5	1987.6	3207.7		
550	37.93	1059.4	2149.8			
600	41.38	1153.4	2340.6			
650	44.83	1247.5	2531.4			
700	48.28	1341.5	2722.2			
710.5	49.00	1361.3	2762.3			
750	51.72	1435.5				
800.4	55.20	1530.3				

For any intermediate pressures/flows please contact Seetru

Enclosed Discharge Safety Relief Valves

for refrigeration

Seetru Limited

Type 646 / 641

Safety valves with stainless steel body <
Enclosed discharge valve with threaded connections <

Example Applications

- Compressor manufacture
- Industrial refrigeration
- Commercial refrigeration
- Ice making machinery
- Air conditioning

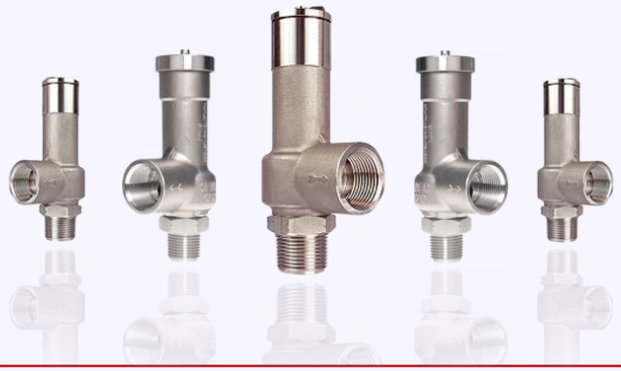

Specifications

- Inlet connections: 3/8” to 1 1/2” (depending on bore size)
- Temperature:-30°C to +200°C
- Pressure range: 6.6 to 55.2 bar (depending on bore size)

Approvals

- Designed in accordance with BS EN ISO-4126-1 &-7
- PED 2014/68/EU (CE)
- PE(S)R UK SI 2016 No. 1105 (UKCA)
- ASME BPVC VIII.1 & XIII (UV)
- CRN

Materials of Construction

Component	Material	Grade
Inlet	Stainless Steel	1.4401 (316)
Body	Stainless Steel	1.4408 (316)
Internal Parts	Stainless Steel	1.4401 (316)
Spring	Stainless Steel	1.4310 (302)

Seal Materials

Seal Material	Temperature Range
Perfluroelastomer (FFKM)	-30°C to +200°C

Standard seal materials shown, others are available.

Valve cap / Top Fitting

- **Standard option** – Sealed Cap (gas tight cap)

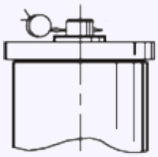

- **Other option** – Sealed lever (gas tight)

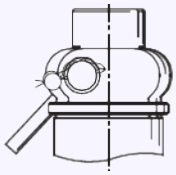

Technical information by bore size

Bore size	9.5			13.7mm			17mm		
Inlet Size	3/8"	1/2"	3/4"	1/2"	3/4"	1"	1"	1 1/4"	1 1/2"
Outlet Size	3/4"			1"			1 1/2"		
Flow Area	70.9mm²			147.7mm²			227mm²		
H - Height (Sealed cap version)	99mm (up to 33 bar) 113mm (33-55.2 bar)			135mm (up to 33 bar) 168mm (33-49 bar)			204mm		
TÜV alloted outflow coefficient	0.77			0.77			0.77		
NB Certified rated slope (ASME)	1.74 scfm/psia			3.47 scfm/psia			5.60 scfm/psia		
Weight (approximate) Kg	0.8			1.1			3.6		
Set Pressure range - PED (CE) bar	7.0 to 55.2			7.0 to 49.0			6.6 to 35.0		
Set Pressure range - ASME (UV) psi	101.5 to 800.4			101.5 to 710.5			95.7 to 507.5		
Relieving pressure/fully open pressure	**Set pressure +10%**								
Reseating pressure	**Set pressure -10%**								

Maximum permissible built up back pressure = 10% of set pressure at or below which flow is not reduced.
Stable operation on flows down to 50% of valve rated capacity.

Standard INLET Thread Connection Types

- BSP Parallel male thread
- BSP Taper male thread
- NPT male thread

Standard OUTLET Thread Connection Types

- BSP Parallel female thread
- NPT female thread

Valves with Rota-lift Easing Gear

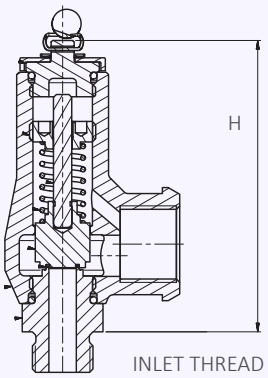

Valve Selection Guide

Approval Required	Valve type	Select Bore	Inlet Size	Inlet Thread Type	Outlet Threa Type	Easing Gear	Seal Material
PED (CE)	646	Select bore size from above table	Select inlet size from above table	Select Inlet thread type	Select Outlet thread type	Sealed Cap is the standard option.	Perfluroelastomer (FFKM)
PED (CE), ASME (UV) & CRN	641						

EAC marking available upon request
***Please send your selected details to Seetru and we can provide the full ordering code, price and lead-time.**

Example of Valve Selection Process

Example Selection	CE/PED, ASME/UV & CRN	641	9.5	3/4"	NPT	NPT	Sealed Cap	FFKM	16.2 bar
	Approval	Valve Type	Bore = 9.5mm	Inlet Size	Inlet Thread Type	Outlet Thread Type	Easing Gear	Seal	Set Pressure

Capacity Table - In accordance with TÜV, AIR at 0°C and 1013mbar. Normal m³/hour
Type 646: Flow rates at 10% above the set pressure

Set Pressure		Bore Size (D0)				
		9.5mm	13.7mm	17mm		
bar	psi	Nm³/Hour	Nm³/Hour	Nm³/Hour		
7	101.5	323.9	673.6	1037.3		
8	116	364.8	758.7	1168.2		
9	130.5	405.7	843.7	1299.2		
10	145	446.6	928.8	1430.2		
15	217.5	651.1	1354.0	2084.9		
20	290	855.6	1779.3	2739.7		
25	362.5	1060.0	2204.5	3394.4		
30	435	1264.5	2629.7	4049.2		
35	507.5	1468.9	3054.9	4703.9		
40	580	1673.4	3480.2			
45	652.5	1877.9	3905.4			
49	710.5	2041.5	4245.6			
50	725	2082.4				
55.2	800.4	2295.0				

For any intermediate pressures/flows please contact Seetru

Capacity Table - In accordance with ASME BPVC.XIII, AIR at 60°F and 14.7 psia/scfm. SCFM
Type 641: Flow rates at 10% above the set pressure

Set Pressure		Bore Size (D0)				
		9.5mm	13.7mm	17mm		
psi	bar	SCFM	SCFM	SCFM		
100	6.90	213.2	432.6	698.1		
150	10.34	307.2	623.4	1006.1		
200	13.79	401.2	814.2	1314.0		
250	17.24	495.3	1005.0	1621.9		
300	20.69	589.3	1195.8	1929.8		
350	24.14	683.3	1386.6	2237.8		
400	27.59	777.4	1577.4	2545.7		
435	30.00	843.2	1711.0	2761.2		
450	31.03	871.4	1768.2	2853.6		
500	34.48	965.4	1959.0	3161.5		
507.5	35.00	979.5	1987.6	3207.7		
550	37.93	1059.4	2149.8			
600	41.38	1153.4	2340.6			
650	44.83	1247.5	2531.4			
700	48.28	1341.5	2722.2			
710.5	49.00	1361.3	2762.3			
750	51.72	1435.5				
800.4	55.20	1530.3				

For any intermediate pressures/flows please contact Seetru

LIQUIDS

Safety Valves for Liquids

Solutions for a range of liquid applications

Safety relief valves (SRVs) are essential safety devices in the liquid industry. They protect pressure vessels and other equipment from overpressure, preventing catastrophic failure and potential injury or loss of life. SRVs are also used to prevent the release of hazardous liquids into the environment. The Seetru range of safety valves for liquid applications has been designed to be compact and highly efficient. The bubble-tight sealing performance makes these valves suitable for many liquid applications including hydraulic systems, pumping systems, thermal relief, chemical storage, waste-water management, oil transfer, petrochemical industry, fire fighting equipment, and water cooling systems. Suitable for temperatures up to 250°C

SEETRU

- Pumping Systems
- Hydraulic Systems
- Thermal Relief
- Waste Water Management
- Petrochemical industries
- Fire Fighting Equipment
- Water Cooling & Feeding Systems

www.seetru.com/liquid

www.seetru.com | info@seetru.com | +44 (0) 117 930 6100

Enclosed Discharge Safety Relief Valves

for liquid

Seetru Limited

Type 670 / 690

Safety valves with bronze body <
Enclosed discharge valve with threaded connections <

Example Applications

- Pumping systems and Hydraulic systems
- Thermal relief
- Waste water management
- Oil transfer
- Petrochemical industries
- Fire fighting equipment
- Water cooling and feeding systems

Specifications

- Inlet connections: 3/8" to 2" (depending on bore size)
- Temperature:-40°C to +200°C (depending on seal material)
- Pressure range: 0.7 to 30 bar (depending on bore size)

Approvals

- Designed in accordance with BS EN ISO-4126-1 &-7
- PED 2014/68/EU (CE)
- PE(S)R UK SI 2016 No. 1105 (UKCA)

Materials of Construction

Component	Material	Grade
Inlet	Type 670 = Brass	CW614N
	Type 690 = Stainless Steel	1.4401 (316)
Body	Bronze	CC491K SB-62 C83600
Internal Parts	Type 670 = Brass	CW614N
	Type 690 = Stainless Steel	1.4401 (316)
Spring	Stainless Steel	1.4310 (302)

Seal Materials

Seal Material	Temperature Range
Viton® (FKM)	-15°C to +200°C
Nitrile (NBR)	-40°C to +120°C

Standard seal materials shown, others available on request

Easing Gear / Lifting Gear Options

Standard Option: Sealed Cap (gas tight cap)

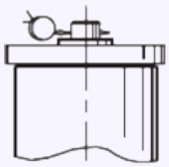

Other Option: Sealed lever (gas tight)

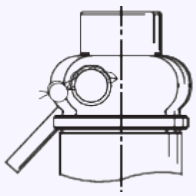

Technical information by bore size

Bore size	9.5mm (67010)			13.7mm (67013)			17mm (67018)			20mm (67020)			25mm (67025)		
Inlet Size	3/8"	1/2"	3/4"	1/2"	3/4"	1"	1"	1 1/4"	1 1/2"	1"	1 1/4"	1 1/2"	1 1/4"	1 1/2"	2"
Outlet Size	3/4"			1"			1 1/2"			2"			2"		
Flow Area	70.9mm²			147.7mm²			227mm²			314mm²			490.4mm²		
H - Height (Sealed cap version)	53.5 mm			52 mm			80 mm (up to 21 bar) 100 mm (21-46 bar)			95mm			119 mm		
Derated coefficient of discharge Kdr	0.59			0.57			0.55			0.57			0.56		
Weight (approximate) Kg	0.8			1.1			3.6			4.0			5.1		
Set Pressure range - PED (CE) bar	0.76 to 30.0			0.7 to 27.0			5.4 to 25.7			3.3 to 22.0			5.65 to 21.0		
Relieving pressure/fully open pressure	**Set pressure +25%**														
Reseating pressure	**Set pressure -20% down to 3 bar**														

1 TÜV alloted outflow coefficients for pressures above 3.0 bar, for lower pressures please see the flow rate tables or contact Seetru.

Standard INLET Thread Connection Types

- BSP Parallel male thread
- BSP Taper male thread
- NPT male thread

Standard OUTLET Thread Connection Types

- BSP Parallel female thread
- NPT female thread

Valve Drawing

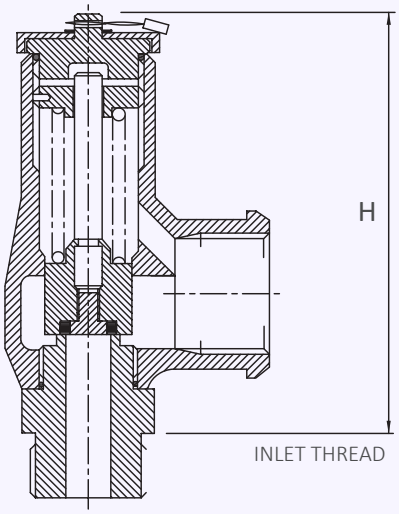

Valve Selection Guide

Approval Required	Valve type	Select Bore	Inlet Size	Inlet Thread Type	Outlet Thread Type	Easing Gear	Seal Material
PED (CE)	670 (Brass inlet)	Select bore size from above table	Select inlet size from above table	Select Inlet thread type	Select Outlet thread type	Select easing gear/top fitting	Viton® (FKM)
	690 (St. Steel inlet)						Nitrile (NBR)
							Other

EAC marking available upon request

***Please send your selected details to Seetru and we can provide the full ordering code, price and lead-time.**

Example of Valve Selection Process

Example Selection	CE/PED	670	20	1 1/2"	BSP Taper	BSP parallel	Sealed Cap	Viton	10.5 bar
	Approval	Valve Type	Bore = 20mm	Inlet Size	Inlet Thread Type	Outlet Thread Type	Top fitting	Seal	Set Pressure

Capacity Table - In accordance with ISO 4126, Water at 15°C - kg/hour
Type 670/690

Set Pressure		Bore Size (D0)				
		9.5mm	13.7mm	17mm	20mm	25mm
bar	psi	kg/hour	kg/hour	kg/hour	kg/hour	kg/hour
0.7	10.15		4001			
0.76	11.02	2075	4169			
1	14.5	2380	4782			
2	29	3367	6759			
3	43.5	4123	8284			
4	58	4761	9560		20384	
5	72.5	5323	10694		22792	
6	87	5831	11708	17394	24966	38289
7	101.5	6298	12654	18791	26968	39920
8	116	6733	13519	20089	28828	42676
9	130.5	7141	14348	21307	30579	45265
10	145	7528	15116	22460	32231	49431
15	217.5	9219	18523	27521	39477	58437
20	290	10650	21376	31763	45583	69906
22	319	11170	22419	33314	47807	
25	362.5	11902	23914			
27	391.5	12369	24837			
30	435	13040				

For any intermediate pressures/flows please contact Seetru

Enclosed Discharge Safety Relief Valves

for liquid

Seetru Limited

Type 680

Safety valves with stainless steel body <
Enclosed discharge valve with threaded connections <

Example Applications

- Pumping systems and Hydraulic systems
- Thermal relief
- Waste water management
- Oil transfer
- Petrochemical industries
- Fire fighting equipment
- Water cooling and feeding systems

Specifications

- Inlet connections: 3/8" to 2" (depending on bore size)
- Temperature:-40°C to +200°C (depending on seal material)
- Pressure range: 0.7 to 30 bar (depending on bore size)

Approvals

- Designed in accordance with BS EN ISO-4126-1 &-7
- PED 2014/68/EU (CE)
- PE(S)R UK SI 2016 No. 1105 (UKCA)

Materials of Construction

Component	Material	Grade
Inlet	Stainless Steel	1.4401 (316)
Body	Stainless Steel	316
Internal Parts	Stainless Steel	1.4401 (316)
Spring	Stainless Steel	1.4310 (302)

Seal Materials

Seal Material	Temperature Range
Viton® (FKM)	-15°C to +200°C
Nitrile (NBR)	-40°C to +120°C

Standard seal materials shown, others available on request

Easing Gear / Lifting Gear Options

Standard Option: Sealed Cap (gas tight cap)

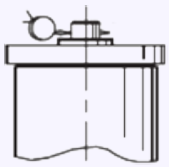

Other Option: Sealed lever (gas tight)

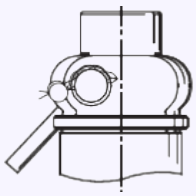

Technical information by bore size

Bore size	9.5mm (68010)			13.7mm (68013)			17mm (68018)			20mm (68020)			25mm (68025)		
Inlet Size	3/8"	1/2"	3/4"	1/2"	3/4"	1"	1"	1 1/4"	1 1/2"	1"	1 1/4"	1 1/2"	1 1/4"	1 1/2"	2"
Outlet Size	3/4"			1"			1 1/2"			2"			2"		
Flow Area	70.9mm²			147.7mm²			227mm²			314mm²			490.4mm²		
H - Height (Sealed cap version)	99mm			138mm			204mm			215			241		
Derated coefficient of discharge, Kdr	0.59			0.57			0.55			0.57			0.56		
Weight (approximate) Kg	0.8			1.1			3.6			4.0			5.1		
Set Pressure range - PED (CE) bar	0.76 to 30.0			0.7 to 27.0			5.4 to 25.7			3.3 to 22.0			5.65 to 21.0		
Relieving pressure/fully open pressure	**Set pressure +25%**														
Reseating pressure	**Set pressure -20% down to 3 bar**														

1 TÜV alloted outflow coefficients for pressures above 3.0 bar, for lower pressures please see the flow rate tables or contact Seetru.

Standard INLET Thread Connection Types

- BSP Parallel male thread
- BSP Taper male thread
- NPT male thread

Standard OUTLET Thread Connection Types

- BSP Parallel female thread
- NPT female thread

Valve Drawing

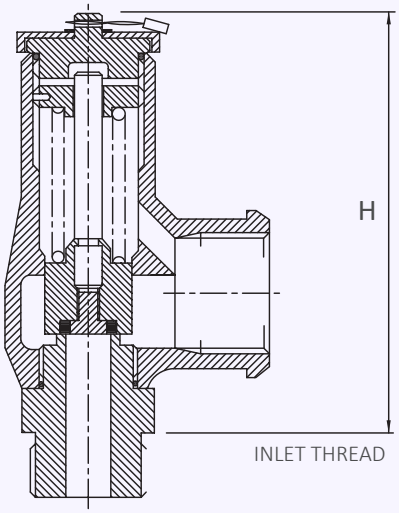

Valve Selection Guide

Approval Required	Valve type	Select Bore	Inlet Size	Inlet Thread Type	Outlet Thread Type	Easing Gear	Seal Material
PED (CE)	680	Select bore size from above table	Select inlet size from above table	Select Inlet thread type	Select Outlet thread type	Select easing gear/top fitting	Viton® (FKM)
							Nitrile (NBR)
							Other

EAC marking available upon request

***Please send your selected details to Seetru and we can provide the full ordering code, price and lead-time.**

Example of Valve Selection Process

Example Selection	CE/PED	680	20	1 1/2"	BSP Taper	BSP parallel	Sealed Cap	Viton	10.5 bar
	Approval	Valve Type	Bore = 20mm	Inlet Size	Inlet Thread Type	Outlet Thread Type	Top fitting	Seal	Set Pressure

Capacity Table - In accordance with ISO 4126, Water at 15°C - kg/hour
Type 680

Set Pressure		Bore Size (D0)				
		9.5mm	13.7mm	17mm	20mm	25mm
bar	psi	kg/hour	kg/hour	kg/hour	kg/hour	kg/hour
0.7	10.15		4001			
0.76	11.02	2075	4169			
1	14.5	2380	4782			
2	29	3367	6759			
3	43.5	4123	8284			
4	58	4761	9560		20384	
5	72.5	5323	10694		22792	
6	87	5831	11708	17394	24966	38289
7	101.5	6298	12654	18791	26968	39920
8	116	6733	13519	20089	28828	42676
9	130.5	7141	14348	21307	30579	45265
10	145	7528	15116	22460	32231	49431
15	217.5	9219	18523	27521	39477	58437
20	290	10650	21376	31763	45583	69906
22	319	11170	22419	33314	47807	
25	362.5	11902	23914			
27	391.5	12369	24837			
30	435	13040				

For any intermediate pressures/flows please contact Seetru

Enclosed Discharge Safety Relief Valves

for liquid

Seetru Limited

Type 970 Threaded

Safety valves made with brass Inlets <
Enclosed discharge valve with threaded connections <
Metal to metal sealing <

Example Applications

- Pumping systems and Hydraulic systems
- Thermal relief
- Waste water management
- Oil transfer
- Petrochemical industries
- Fire fighting equipment
- Water cooling and feeding systems
- Chemical process

Specifications

- Inlet connections: 1/2" to 2" threaded connections
  (depending on valve bore size) (for flanged connections see 980 Flanged datasheet)
- Temperature range:-50°C to +250°C (depending on body o'ring material)
- Pressure range: 0.3 to 36.0 bar (depending on valve bore size)

Approvals

- Designed in accordance with BS EN ISO-4126-1 &-7
- PED 2014/68/EU (CE)
- PE(S)R UK SI 2016 No. 1105 (UKCA)
- Leak tightness at 90% set pressure to API 527 and in accordance with EN ISO 4126-1

Materials of Construction

Component	Material	Grade
Inlet	Brass	CZ132 / CW602N
Outlet Body (10mm bore valve)	Bronze	SB-62 C8360
Outlet Body (15, 20 & 25mm bore valves)	Stainless Steel	1.4408 (316)
Spring	Stainless Steel	1.4310 (302)
Disc	Stainless Steel	S20910

Seal Materials

This valve using metal to metal sealing. There is a choice of o'ring used for the sealed cap/lever

O'ring material	Temperature Range
Viton® (FKM)	-20°C to +250°C
Nitrile (NBR)	-30°C to +150°C
Silicone	-50°C to +250°C
EPDM	-40°C to +150°C
PTFE	-50°C to +250°C

Standard seal materials shown, others are available.

Easing Gear / Lifting Gear / Top Fitting Options

- Sealed Cap (gas tight cap)

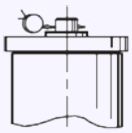

- Sealed lever (gas tight lever)

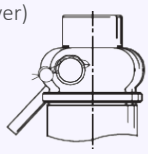

- Unsealed lever (not gas tight)

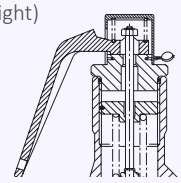

Technical information by bore size

Bore size	10mm (97010)			15mm (97015)			20mm (97020)			25mm (97025)			
Inlet Size	1/2"	3/4"	1"	1"	1 1/4"	1 1/2"	1"	1 1/4"	1 1/2"	1"	1 1/4"	1 1/2"	2"
Outlet Size	1"			1 1/2"			2"			2"			
Flow Area	78.5mm²			177mm²			314mm²			491mm²			
H - Height (Sealed Cap Version)	114mm			168mm			141mm			225mm			
Derated coefficient discharge of water below 100°C - Kdr	0.48			0.54			0.503			0.507			
Weight (approximate) Kg	1.0			2.1			3.5			4.2			
Set Pressure range - PED (CE) bar	0.3 to 28.0			0.3 to 33.0			0.6 to 36.0			0.48 to 23.5			
Relieving pressure/fully open pressure	**Set pressure +10%**												
Reseating pressure	**Set pressure -20%** (0.6 bar below 3.0 bar)												

- Leak tightness at 90% set pressure to API 527 and in accordance with EN ISO 4126-1

Standard INLET Connection Types

- BSP parallel male thread
- BSP taper male thread
- NPT male thread
- BSP parallel female thread (limited option)

Standard OUTLET Connection Types

- BSP parallel female thread

Valve Drawing

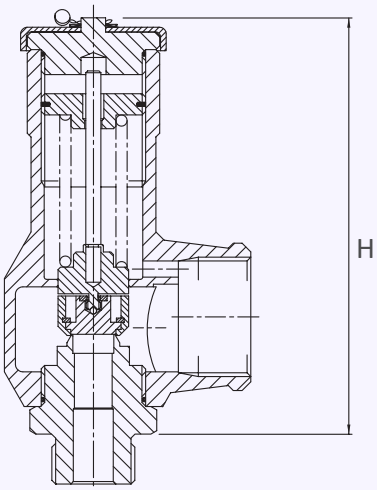

Valve Selection Guide

Valve type	Select Bore	Inlet Size	Inlet Thread Type	Top Fitting	O'ring material (for cap)	Set pressure
970	Select bore size from above table	Select inlet size from above table	Select Inlet Thread type	Select easing gear/top fitting	See table	Set pressure from available range

EAC marking available upon request

***Please send your selected details to Seetru and we can provide the full ordering code, price and lead-time.**

Example of Valve Selection Process

Example Selection	970	15	1"	BSP parallel	Rota Lift	Viton	17.5 bar
	Valve Type	Bore = 15mm	Inlet Size	Inlet Thread Type	Top Fitting	O'ring	Set Pressure

Capacity Table - In accordance with EN ISO 4126-1
Water below 100°C at 10% accumulation - litres/min

Set Pressure		Bore Size (D0)				
		10mm	15mm	20mm	25mm	
bar	psi	Litres/min of Water	Litres/min of Water	Litres/min of Water	Litres/min of Water	
3	43.5	58	147	243	383	
4	58	67	169	281	443	
5	72.5	74	189	314	495	
6	87.00	82	207	344	542	
7	101.5	89	224	372	585	
8	116	95	240	397	626	
9	130.5	100	254	422	664	
10	145	106	268	444	700	
15	217.5	130	328	544	857	
20	290	150	379	628	990	
25	362.5	167	424	703		
28	406	177	449	744		
30	435		465	770		
33	478.5		487	807		
35	507.5			831		
36	522			843		

For any intermediate pressures/flows please contact Seetru

Enclosed Discharge Safety Relief Valves

for liquid

Seetru Limited

Type 980 Threaded

Safety valves made from Stainless Steel <
Enclosed discharge valve with threaded connections <
Metal to metal sealing <

Example Applications

- Pumping systems and Hydraulic systems
- Thermal relief
- Waste water management
- Oil transfer
- Petrochemical industries
- Fire fighting equipment
- Water cooling and feeding systems
- Chemical process

Specifications

- Inlet connections: 1/2" to 2" threaded connections (depending on valve bore size)
  *For flanged connections see datasheet 980 Flanged
- Temperature range:-50°C to +250°C (depending on body o'ring material)
- Pressure range: 0.3 to 36.0 bar (depending on valve bore size)

Approvals

- Designed in accordance with BS EN ISO-4126-1 &-7
- PED 2014/68/EU (CE)
- PE(S)R UK SI 2016 No. 1105 (UKCA)
- Leak tightness at 90% set pressure to API 527 and in accordance with EN ISO 4126-1

Materials of Construction

Component	Material	Grade
Inlet	Stainless Steel	1.4401 (316)
Body	Stainless Steel	1.4408 (316)
Internal Parts	Stainless Steel	1.4401 (316)
Spring	Stainless Steel	1.4310 (302)
Disc	Stainless Steel	S20910

Seal Materials

This valve using metal to metal sealing. There is a choice of o'ring used for the sealed cap/lever.

O'ring material – Top cap	Temperature Range
Viton® (FKM)	-20°C to +250°C
Nitrile (NBR)	-30°C to +150°C
Silicone	-50°C to +250°C
EPDM	-40°C to +150°C
PTFE	-50°C to +250°C

Standard seal materials shown, others are available.

Easing Gear / Lifting Gear / Top Fitting Options

- Sealed Cap (gas tight cap)

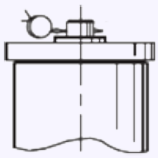

- Sealed lever (gas tight)

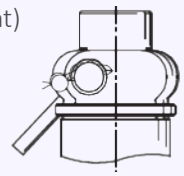

Technical information by bore size

Bore size	10mm (98010)			15mm (98015)			20mm (98020)			25mm (98025)			
Inlet Size	1/2"	3/4"	1"	1"	1 1/4"	1 1/2"	1"	1 1/4"	1 1/2"	1"	1 1/4"	1 1/2"	2"
Outlet Size	1"			1 1/2"			2"			2"			
Flow Area	78.5mm²			177mm²			314mm²			491mm²			
H - Height (Sealed cap version)	114mm			168mm			144mm			225mm			
Derated coefficient discharge of water below 100°C - Kdr	0.48			0.54			0.503			0.507			
Weight (approximate) Kg	1.0			2.1			3.5			4.2			
Set Pressure range - PED (CE) bar	0.3 to 28.0			0.3 to 33.0			0.6 to 36.0			0.48 to 23.5			
Relieving pressure/fully open pressure	**Set pressure +10%**												
Reseating pressure	**Set pressure -20%** (or 0.6 bar below 3 bar)												

- Leak tightness at 90% set pressure to API 527 and in accordance with EN ISO 4126-1.

Standard INLET Connection Types

- BSP parallel male thread
- BSP taper male thread
- NPT male thread
- BSP parallel female thread (limited option)

Standard OUTLET Connection Types

- BSP parallel female thread

Valve Drawing

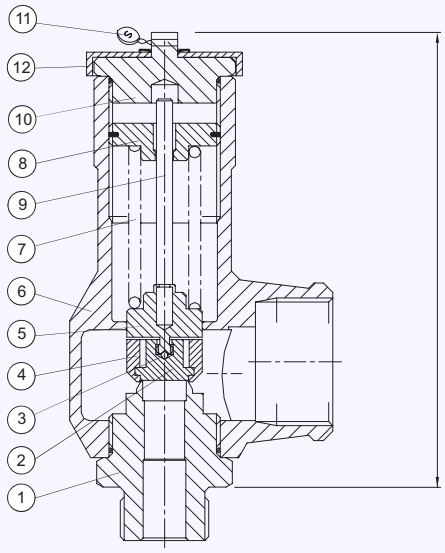

Valve Selection Guide

Valve type	Select Bore	Inlet Size	Inlet Thread Type	Top Fitting	O'ring material (for cap)	Set pressure
980	Select bore size from above table	Select inlet size from above table	Select Inlet Thread type	Select easing gear/top fitting	See table	Set pressure from available range

EAC marking available upon request
***Please send your selected details to Seetru and we can provide the full ordering code, price and lead-time.**

Example of Valve Selection Process

Example Selection	980	15	1"	BSP parallel	Sealed Lever	Viton	17.5 bar
	Valve Type	Bore = 15mm	Inlet Size	Inlet Thread Type	Top Fitting	O'ring	Set Pressure

Type 980 Capacity Table - In accordance with EN ISO 4126-1
Water below 100°C at 10% accumulation - litres/min

Set Pressure		Bore Size (D0)				
		10mm	15mm	20mm	25mm	
bar	psi	Litres/min of Water	Litres/min of Water	Litres/min of Water	Litres/min of Water	
3	43.5	58	147	243	383	
4	58	67	169	281	443	
5	72.5	74	189	314	495	
6	87.00	82	207	344	542	
7	101.5	89	224	372	585	
8	116	95	240	397	626	
9	130.5	100	254	422	664	
10	145	106	268	444	700	
15	217.5	130	328	544	857	
20	290	150	379	628	990	
25	362.5	167	424	703		
28	406	177	449	744		
30	435		465	770		
33	478.5		487	807		
35	507.5			831		
36	522			843		

For any intermediate pressures/flows please contact Seetru

Enclosed Discharge Safety Relief Valves

for liquid

Seetru Limited

Type 980 Flanged

Safety valves made from Stainless Steel <
Enclosed discharge valve with flanged connections <
Metal to metal sealing <

Example Applications

- Pressure vessels
- Thermal relief
- Water tanks
- Liquid storage
- Oil
- Chemical process

Specifications

- Inlet connections: DN15 (1/2), DN20 (3/4") or DN25 (1") flange – DIN EN1092 and ANSI flanges are available
- Temperature range:-50°C to +250°C (depending on body o'ring material)
- Pressure range: 0.3 to 33.0 bar (depending on bore size)

Approvals

- Designed in accordance with BS EN ISO-4126-1 &-7
- PED 2014/68/EU (CE)
- PE(S)R UK SI 2016 No. 1105 (UKCA)
- Leak tightness at 90% set pressure to API 527 and in accordance with EN ISO 4126-1

Materials of Construction

Component	Material	Grade
Inlet & Outlet Flanges	Stainless Steel	1.4401 (316)
Body	Stainless Steel	1.4408 (316)
Internal Parts	Stainless Steel	1.4401 (316)
Spring	Stainless Steel	1.4310 (302)
Disc	Stainless Steel	S20910

Seal Materials

This valve using metal to metal sealing. There is a choice of o'ring used for the sealed cap/lever.

O'ring material – Top cap	Temperature Range
Viton® (FKM)	-20°C to +250°C
Nitrile (NBR)	-30°C to +150°C
Silicone	-50°C to +250°C
EPDM	-40°C to +150°C
PTFE	-50°C to +250°C

Standard seal materials shown, others are available.

Easing Gear / Lifting Gear / Top Fitting Options

- Sealed Cap (Gas Tight Cap)

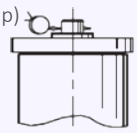

- Sealed Lever (Gas Tight)

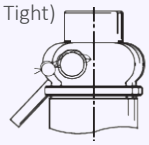

- Sealed Lever (With Test Gag)

A test gag is used to prevent the valve from opening at the set pressure during hydraulic testing when commissioning a system. Once tested, the gag screw is removed and replaced with a short blanking plug before the valve is place in service.

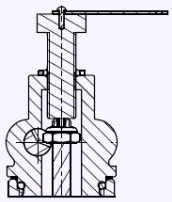

Technical information by bore size

Bore size	10mm (98010)			15mm (98015)
Inlet Size	DN15 (1/2”)	DN20 (3/4”)	DN25 (1”)	DN25 (1”)
Outlet Size	DN25 (1")			DN40 (1 1/2")
Flow Area	78.5mm²			177mm²
H - Height (Sealed Lever version)	200mm			253mm
Derated coefficient discharge of water below 100°C - Kdr	0.48			0.54
Weight (approximate) Kg	3.0			5.3
Set Pressure range - PED (CE) bar	0.3 to 28.0			0.3 to 33.0
Relieving pressure/fully open pressure	**Set pressure +10%**			
Reseating pressure	**Set pressure -20% (or 0.6 bar below 3 bar)**			

- Leak tightness at 90% set pressure to API 527 and in accordance with EN ISO 4126-1.

Valve Drawing

10mm bore – 94610

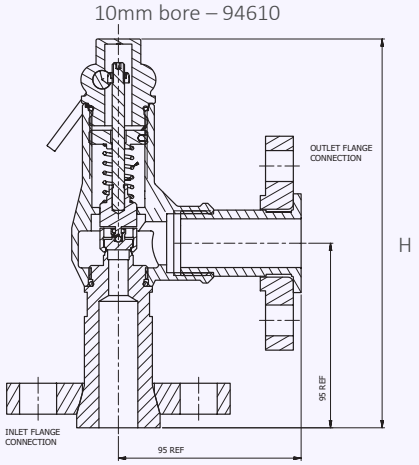

15mm bore – 94615

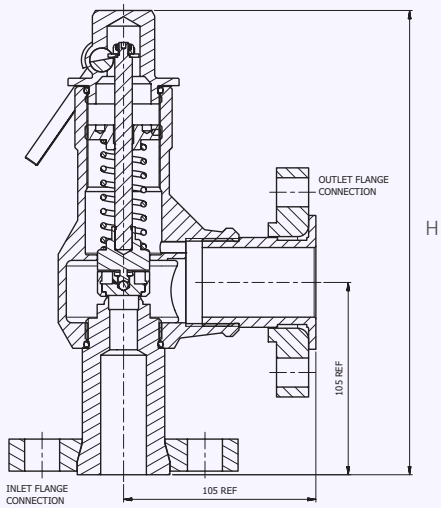

Standard INLET Connection Types

- DIN EN1092 Flange PN16, PN25 or PN40
- ASME Flange CL150, CL300 or CL600

Standard OUTLET Connection Types

- DIN EN1092 Flange PN16, PN25 or PN40
- ASME Flange CL150 or CL300

Valve Selection Guide

Valve type	Select Bore	Inlet Size	Inlet Flange Type	Outlet Flange Type	Easing Gear	O'ring material (for cap)
980	Select bore size from above table	Select inlet size from above table	Select Inlet Flange type	Select Outlet Flange type	Select easing gear/top fitting	See table

EAC marking available upon request

***Please send your selected details to Seetru and we can provide the full ordering code, price and lead-time.**

Example of Valve Selection Process

Example Selection	980	15	DN25	DIN EN1092 Flange PN16	DIN EN1092 Flange PN16	Sealed Lever	Viton	10.5 bar
	Valve Type	Bore = 10mm	Inlet Size	Inlet Flange Type	Outlet Flange Type	Top Fitting	O'ring	Set Pressure

Type 980 Capacity Table - In accordance with EN ISO 4126-1
Water below 100°C at 10% accumulation - litres/min

Set Pressure		Bore Size (D0)				
		10mm	15mm			
bar	psi	Litres/min of Water	Litres/min of Water			
3	43.5	58	147			
4	58	67	169			
5	72.5	74	189			
6	87.00	82	207			
7	101.5	89	224			
8	116	95	240			
9	130.5	100	254			
10	145	106	268			
15	217.5	130	328			
20	290	150	379			
25	362.5	167	424			
28	406	177	449			
30	435		465			
33	478.5		487			

For any intermediate pressures/flows please contact Seetru

Enclosed Discharge Safety Relief Valves

for Liquid *hygienic*

Seetru Limited

Type 6L0

Clean Service/Hygienic Safety valves with Stainless Steel body <
Enclosed discharge valve with Tri-Clamp inlet connections <

Safety valve for food industry & other hygienic applications

Example Applications

- Liquid storage
- Food production plants
- Hygienic applications
- Pressure vessels

Specifications

- Inlet connections: 1/2” to 1” Tri-Clamp (depending on bore size)
- Temperature: -15°C to +200°C (depending on seal material)
- Pressure range: 0.7 to 30.0 bar (depending on bore size)

Approvals

- Designed in accordance with BS EN ISO-4126-1 &-7
- PED 2014/68/EU (CE)
- PE(S)R UK SI 2016 No. 1105 (UKCA)

Materials of Construction

Component	Material	Grade
Inlet	Stainless Steel	1.4404 (316)
Body	Stainless Steel	1.4408 (316)
Internal parts	Stainless Steel	1.4401 (316)
Spring	Stainless Steel	1.4310 (302)

SURFACE FINISH
Process Contact Surface
In accordance with ASME BPE-2005 Table SF-5.
Surface designation Ra Max 15 µinches, 0.4 µm, Electropolished.

Other Surfaces
Not greater than 60 µinches, 1.5 µm.

Seal Materials

Seal Material	Temperature Range
Perfluoroelastomer (FFKM)	-15°C to +200°C

Standard seal materials shown, others are available.
Elastomer soft sealing specifically developed for food & pharmaceutical industries.

Compliant to:
1. FDA 21 CFR 177.2600
2. United States Pharmacopoeia (USP) Class VI
3. SP3A Sanitary Standards for Multiple Use Rubber Dairy Equipment No 18-03.

Easing Gear / Lifting Gear Options

- **Standard option**:

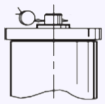

Sealed Cap (gas tight cap)

- **Other Options:**

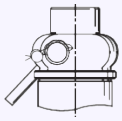

Sealed lever (gas tight)

Technical information by bore size

Bore size	9.5mm (6L010)		13.7mm (6L013)	
Inlet Size	1/2"	3/4"	3/4"	1"
Outlet Size	3/4"		1"	
Flow Area	70.9mm²		147.7mm²	
H - Height (Sealed cap version)	120mm		165mm	
TÜV alloted outflow coefficient	0.59		0.57	
Weight (approximate) Kg	0.9		1.3	
Set Pressure range - PED (CE) bar	0.76 to 30.0		0.7 to 27.0	
Relieving pressure/fully open pressure	**Set pressure +25%**			
Reseating pressure	**Set pressure max -20% down to 3 bar (Below 3 bar = 0.6 bar)**			

Stable operation on flows down to 50% of valve rated capacity.

Standard Thread Connection Types

- Tri-Clamp® compatable generally in accordance with ASME BPE 2005 & BS 4825-3.

Standard Outlet Connection Types

- BSP Female Pipe threads (G)

Valve drawing

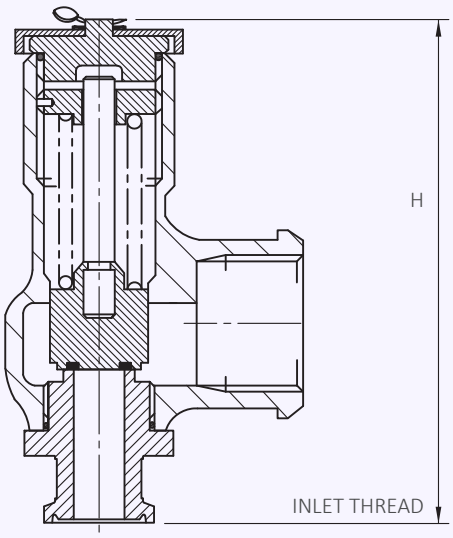

Valve Selection Guide

Approval Required	Valve type	Select Bore	Inlet Size	Easing Gear	Seal Material
PED (CE)	6L0	Select bore size from above table	Select inlet size from above table	Select easing gear/top fitting	Perfluroelastomer (FFKM)
					Other

EAC marking available upon request

***Please send your selected details to Seetru and we can provide the full ordering code, price and lead-time.**

Example of Valve Selection Process

Example Selection	PED (CE)	6L0	9.5mm	1/2"	Sealed Cap	Perfluroelastomer (FFKM)	3.5 bar
	Approval	Valve Type	Bore Size	Inlet Size	Easing Gear	Seal	Set Pressure

Capacity Table - In accordance with ISO 4126, Water at 15°C - kg/hour
Type 6L0

Set Pressure		Bore Size (D0)	
		9.5mm (6L010)	13.7mm (6L013)
bar	psi	kg/hour	kg/hour
0.7	10.15		4001
0.76	11.02	2075	4169
1	14.5	2380	4782
2	29	3367	6759
3	43.5	4123	8284
4	58	4761	9560
5	72.5	5323	10694
6	87	5831	11708
7	101.5	6298	12654
8	116	6733	13519
9	130.5	7141	14348
10	145	7528	15116
15	217.5	9219	18523
20	290	10650	21376
22	319	11170	22419
25	362.5	11902	23914
27	391.5	12369	24837
30	435	13040	

For any intermediate pressures/flows please contact Seetru

Change-Over Valves

Seetru Limited

for compressed air or gases | *cryogenic & liquefied gas* | *refrigeration* | *hydrogen*

COV10 / COV13 / COV30

Solutions for plant and process efficiency

Change-over valves (sometimes referred to as selector valves or three-way valves) enables the switching of flow from one safety valve to another. Typically used where plant shutdown is impossible or undesirable for process, engineering or commercial reasons. With change-over valves it is possible to switch over between parallel safety valves without interrupting operation, so that maintenance work can be carried out on each safety valve in turn. Seetru change-over valves in combination with our safety valves provide the best solution for plant safety and efficiency. Seetru products are widely recognised for their exceptional quality and reliability.

Features

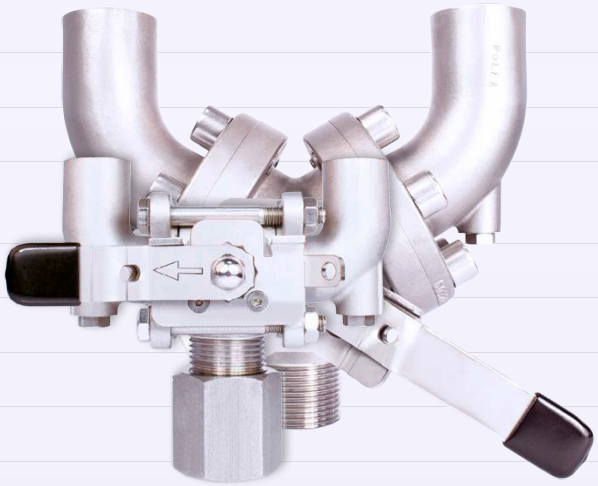

- Patented Design
- Lubricant Free Operation
- Can be fitted with a Bursting Disc
- Lockable handle (optional padlock available)
- Designed for ease of maintenance
- Option to degrease for Oxygen service
- Impossible to isolate both safety valves
- Adjustable Spindle Gland
- Robust Construction
- Compact and easy to use design
- Designed in accordance with BS EN 378
- Pressure drops with 10.0mm for COV10 bore SRV & 18.0mm for COV30 (in accordance with BS EN 13136)
- Ventable outlets for safe removal of Safety Valves
- Seat leakage EV 12266-1 Rate A
- Available with a wide range of fittings and adaptors
- Optimised using Computational Fluid Dynamics (CFD)

Fluid Mahcanics

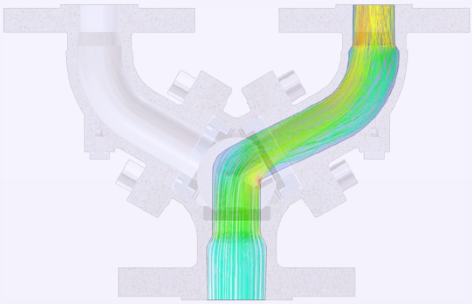

The Seetru Change-Over Valves were designed and developed using Computational Fluid Dynamics (CFD) in order to simulate and optimise the flow of the fluids through the valve.

Specifications: COV10

System Connections	½” to 1” BSP, BSPT & NPT
Valve Connectiond	½” NPT or 3/4” BSP (with or without orientators)
Change-Over Valve Kv	10.0 (Cv= 11.5)
Materials of Construction	Stainless Steel
Seat Materials	25% Carbon filled P.T.F.E.
Temperature Range	-196°C to +200°C
Max Design Pressure	75 bar
Material Certifiation	BS EN ISO10204 3.1 Pressure Retaining Parts (Optional Extra)
Safety Valve Orifice Size	Up to 10mm (Full Lift Type)
Maximum Safety Valve Set Pressure	75 bar

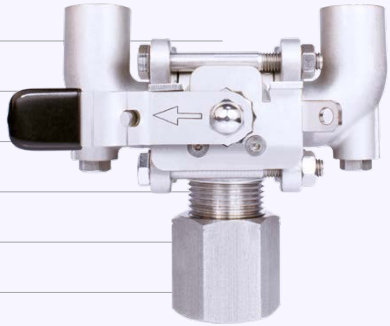

Specifications: COV13

System Connections	Please contact Seetru for information
Valve Connections	Please contact Seetru for information
Materials of Construction	Stainless Steel with Mild Steel or Stainless Steel Internals
Seat Materials	Elastomer P.T.F.E
Maxium Safety valve Set Pressure	65.0 bar
Temperature Range	-30 °C to 200 °C (subject to seal material)

Specifications: COV30

System Connections	1” to 1-1/2” BSP, BSPT, NPT, CL150 to CL600 & PN16 to PN100
Valve Connections	¾” to 1” BSP, BSPT, NPT (with or without orientators), CL150 to CL600 & PN16 to PN100
Change-Over Valve Kv	30
Materials of Construction	CF8M/316/1.4401
Seat Materials	25% Carbon filled P.T.F.E.
Temperature Range	-196°C to +200°C
Max Design Pressure	CL600 or PN100
Material Certifiation	BS EN ISO10204 3.1 Pressure Retaining Parts (Optional Extra)
Safety Valve Orifice Size	Up to 18mm (Full Lift Type)
Maximum Safety Valve Set Pressure	100 bar

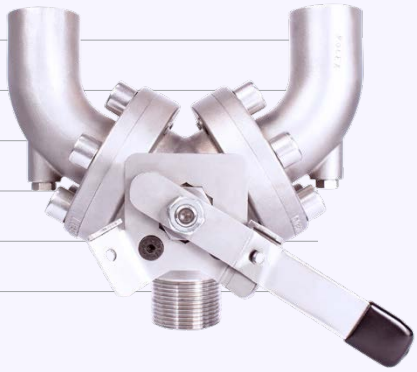

Operation Instructions: COV10 / COV30

1	Unlock handle if locking device fitted (recommended).
2	Starting in a motion away from the duty SRV, rotate handle through 180° (COV10) or 120° (COV10), either clockwise or anticlockwise dependent uponstart starting position.
3	Once fully rotated, lock in position if locking device fitted (recommended).
4	If the now standby SRV is to be remove: with caution, un-tighten vent nut of standby Change-over arm by 1 to 2 revolutions to exhaust trapped fluid from change-over arm.
5	Once trapped fluid has de-pressurised, re-tighten vent plug with a tightening torque of 3.0 Nm.
6	Remove the standby SRV.
7	The user may plug the vacant outlet if desired, however sufficient safety procedures (for example Lock out Tag out) must be in place to prevent inadv inadvertent change over, thus rendering the system un-protected against excessive pressure. If the outlet is plugged, vent arm of pressure, as previously described, prior to removal.

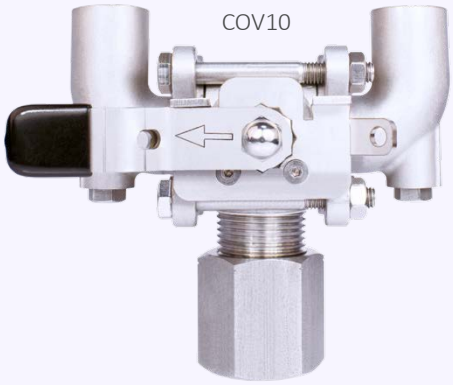

Fittings, Adaptors and Connections

The Seetru COV30 Flanged Change-Over Valve

- The Seetru COV10 and COV30 Change-Over Valves can be supplied with a range of fittings and adaptors to provide compatibility with a large variety of systems.
- The COV30 is also available with flanged connections (A or PN).

Explore Seetru's Product Range

Quality & Innovation

Safety Relief Valves
Seetru safety relief valves are known for their reliability, performance, and safety. These valves are manufactured in bronze, brass, or stainless steel and offer a wide range of connections, for applications up to 250 °C

Change-Over Valves
Change-over valves are critical components in various industrial applications, enabling seamless switching between fluid sources or flow paths. Typically used where plant shut-down is impossible or undesirable for process, engineering, or commercial reasons.

Liquid Level Gauges
Accurate liquid level monitoring is crucial, whether you're navigating the high seas or managing critical industrial processes. Seetru offers a comprehensive range of liquid-level gauges and indicators designed for precise, reliable measurement in diverse applications.

Pressure & Temperature Valves
The Seetru P3W Pressure & Temperature relief valve provides protection against both excess temperature as well as over pressurisation. Each of the lift mechanisms will work independently of each other. The valve is designed to be used in hot water boiler applications.

Auxiliary Valves
From preventing backflow with check valves to guaranteeing precise pressure with minimum pressure valves, each compact valve plays a vital role. Air start valves deliver rapid pressure bursts while isolating valves segment flow for maintenance.

Circular Window Sight Glasses
Seetru circular window sight glasses are compact low-cost assemblies that provide reliable level indication and positive indication when liquid is present. These screw-in plugs are fitted with high-quality glass.

Pressure Reducing Valves
Alongside our own manufactured items, Seetru also offers a range of pressure-regulating valves, pressure-reducing valves, and overflow valves. They are mainly used in industrial plants, plant engineering, and process engineering. Pressure-reducing valves can be supplied with flanges, weld ends, or threaded connections.

Testing Equipment
The Seetru Quicktester™ is compact, lightweight, and portable design is very robust and able to meet the demands of a busy maintenance workshop or mobile operation. The Quicktester™ can be used with plant-generated air supplies or with mobile bottled gas.

www.seetru.com/seetru-products

Seetru Liquid Level Gauges

Measure with Accuracy

Accurate liquid level monitoring is crucial

Whether you're navigating the high seas or managing critical industrial processes. Seetru offers a comprehensive range of liquid-level gauges and indicators designed for precise, reliable measurement in diverse applications.

Confidently navigate the complexities of liquid level monitoring with Seetru's comprehensive range of gauges and indicators. Engineered for exactitude and reliability, our instruments empower you across diverse applications, from the open seas to industrial heartlands.

Seetru Liquid Level Gauges

www.seetru.com/products-sector/liquid-level-gauges

www.seetru.com | info@seetru.com | +44 (0) 117 930 6100

UK Manufacturing

Seetru Is Vertically Integrated Company

SEETRU

Seetru isn't just a safety valve supplier

Seetru is a vertically integrated manufacturer, meaning we control every stage of the valve creation process, from initial design and material selection to final production and testing.

- **Unmatched Quality Control**
- **Streamlined Communication**
- **Enhanced Flexibility**
- **Faster Lead Times**

www.seetru.com

Seetru Distributor Network

Find Your Local Supplier for Seetru Products

Global Reach, Local Support

Seetru is a global company with an extensive distributor network. This means that wherever you are on the planet, you can access our industry-leading safety valves and receive exceptional service.

www.seetru.com/our-distributors

Seetru Limited, Albion Dockside Works, Bristol, BS1 6UT, England.

Copyright© 2025 Seetru Limited